Destruction of Legacy Organics in SRS Tank 48H Using Wet Air Oxidation Technology

Project Number: SR072201

Kofi Adu-Wusu, Daniel J. McCabe, William R. Wilmarth

Savannah River National Laboratory

July 28, 2008

Environmental Management

safety ❖ performance ❖ cleanup ❖ closure

www.em.doe.gov

Presentation Outline

- Project Description
- Wet Air Oxidation Background/Applications
- Summary of Results from the Prior Batch Bench-Scale Simulant Testing
- Technical Strategy/Approach
- Technical Results and Status
- Path Forward
- Project Impact

Project Description

- Returning Tank 48H to operational service is critical to the processing of high level waste at Savannah River Site (SRS)
- Tank 48H at SRS contains tetraphenylborate (TPB) from the operation of an In-Tank Precipitation (ITP) process
- ITP process used NaTBP to precipitate CsTPB
- TPB is not compatible with SRS waste treatment program
  - Needs to be removed or destroyed before the tank can be returned to Tank Farm operational service by 2013 or as soon as practical
- Tank 48H contains ≈250,000 gallons of alkaline slurry
  - Concentration of KTPB and CsTPB ≈21 g/L

Project Description

- Leaving TPB untreated in Tank 48H may lead to
  - Release of benzene vapor to the tank head space in potentially flammable levels
- Insufficient tank space in SRS Tank Farm will result in
  - Reduction in Salt Waste Processing Facility (SWPF) throughput at a cost of about $0.5 Billion/year

Wet Air Oxidation (WAO) Background

- Aqueous phase process in which organic and inorganic components are oxidized using air (O_2)
- Reaction products
  - CO_2, H_2O, and low molecular weight short chain oxygenated organics (carboxylic acids), e.g., acetic acid
- Typical operating ranges
  - Temperature: 100 - 320°C (sub-critical)
  - Pressures: 7 - 210 atmospheres (sub-critical)
  - Reaction times: 15 - 120 minutes
  - Feed flow rate: 1 - 220 gpm per unit
  - Chemical oxygen demand (COD): 10,000 - 100,000 mg/L
    - Total organic carbon (TOC) equivalent of approximately 5,000 - 50,000 mg/L

WAO is a EPA Best Demonstrated Available Technology (BDAT) for a variety of P & U listed organics

WAO Process Schematic

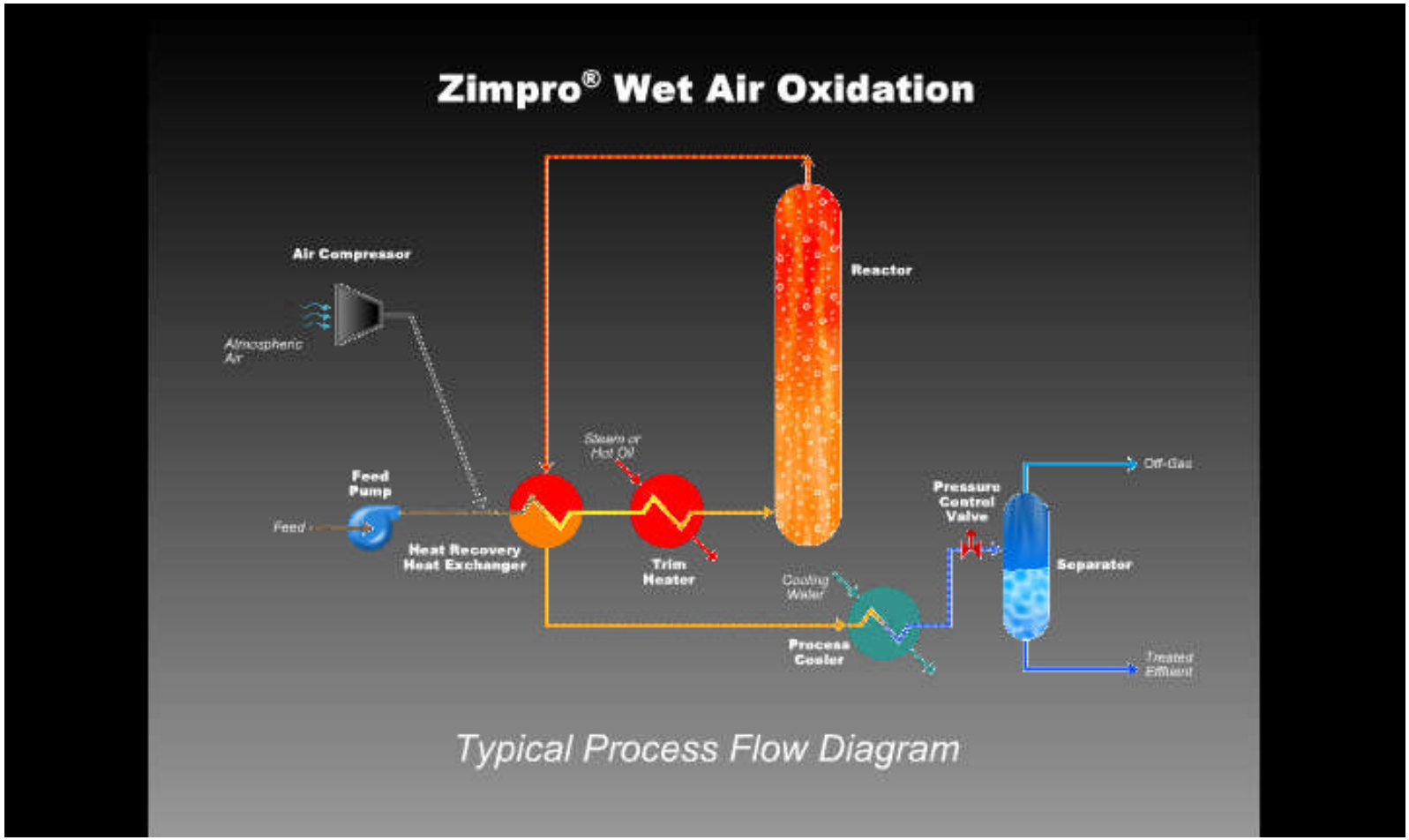

Typical WAO Reactions

- Overall reactions
  - Organics + $O_2 \rightarrow CO_2 + H_2O$ + RCOOH*
  - Organic Cl + $O_2 \rightarrow Cl^{-1} + CO_2$ + RCOOH*
  - Organic N + $O_2 \rightarrow NH_3 + CO_2$ + RCOOH*
  - Sulfur species + $O_2 \rightarrow SO_4^{-2}$
  - Phosphorus species + $O_2 \rightarrow PO_4^{-3}$
  - Organic B + $O_2 \rightarrow BO_2^{-1} + CO_2$ + RCOOH*

*short chain organic acids such as acetic acid make up the major fraction of residual organic compounds

Advantages of WAO

- Proven technology - WAO successfully commercialized for 50+ years
  > 200 full-scale systems have been constructed and operated
  - 130 municipal sludge
  - 90 petrochemical, chemical, and pharmaceutical wastes
  - 25 ethylene plant spent caustic
- Continuous process with fairly short reaction times
- Relatively small process footprints i.e., high throughput per foot print
- Generally requires no use of chemicals
- High thermal efficiency – essentially an autothermal operation
- Corrosion-resistant materials available
- Highly automated operation
- Robust
- Off-gas has negligible NO_x, SO_x, and particulates

WAO APPLICATIONS

- Spent caustic from petroleum refineries and ethylene plants
- Municipal/industrial sludges
- Regeneration of adsorbents
- Organic wastes in pharmaceutical and chemical industries
- Paper manufacturing waste – filler clays, sludge, pulping liquor
- Explosives
- Tannery waste

Petroleum Refinery Spent Caustic WAO Unit (3 gpm flow rate) - Rio de Janeiro, Brazil

Zimpro® WAO System

DoD WAO APPLICATION

- DoD 27-gpm WAO unit at Texas Molecular site in Deer Park, Texas
- Start-up was January 2007
- Completion was November 2007
- No Engineering-scale testing was performed
- Scale-up factor = 625

WAO was used to destroy neutralized chemical warfare materiel – mustard agents, nerve agents, and other binary weapon components

WAO Radioactive Applications

- Bench-scale WAO was successfully applied in the 1990s to destroy organics (EDTA, HEDTA) in Hanford Site radioactive waste.
  - Organics destruction based on TOC for both simulant and radioactive waste was > 98%.

- Ontario Hydro (in Canada) used a 12 gpm commercial-scale WAO unit in the 1990s to treat EDTA waste contaminated with low levels of radionuclides.
  - EDTA destruction was > 99.5%.

Potential DOE Complex-Wide WAO Applications

- Destruction of organics in general
  - Residual oxalic acid used to dissolve sludges
- Sludge Mass Reduction Program
  - Faster dissolution rates of aluminum in sludges

Summary of Prior Batch Bench-Scale Testing Results

- WAO is effective in destroying TPB and byproducts
- Conditions needed to destroy TPB, its daughter compounds (3PB, 2PB, and 1PB), phenol, and biphenyl are
  - Temperature of 300 °C
  - Reaction time of 3 hours
  - 1:1 feed slurry dilution with 2M NaOH solution
  - $CuSO_4.5H_2O$ solution (500 mg/L Cu) as catalyst
  - 2 mL/L of antifoam agent
- Less aggressive conditions (280 °C and 1-hour reaction time) are needed if biphenyl destruction is excluded.

Summary of Prior Short-Duration (100-Hour) MOC Test Results

- Materials-of-Construction (MOC) Coupons
  - Nickel 201
  - Inconel 690
  - Inconel 600
  - Monel K-500
  - 316-L Stainless Steel
  - 304-L Stainless Steel
  - 2205 Duplex Stainless Steel

- Results indicated the first four on the above list are potentially acceptable

Bench-Scale Shaking Autoclave with MOC Coupons

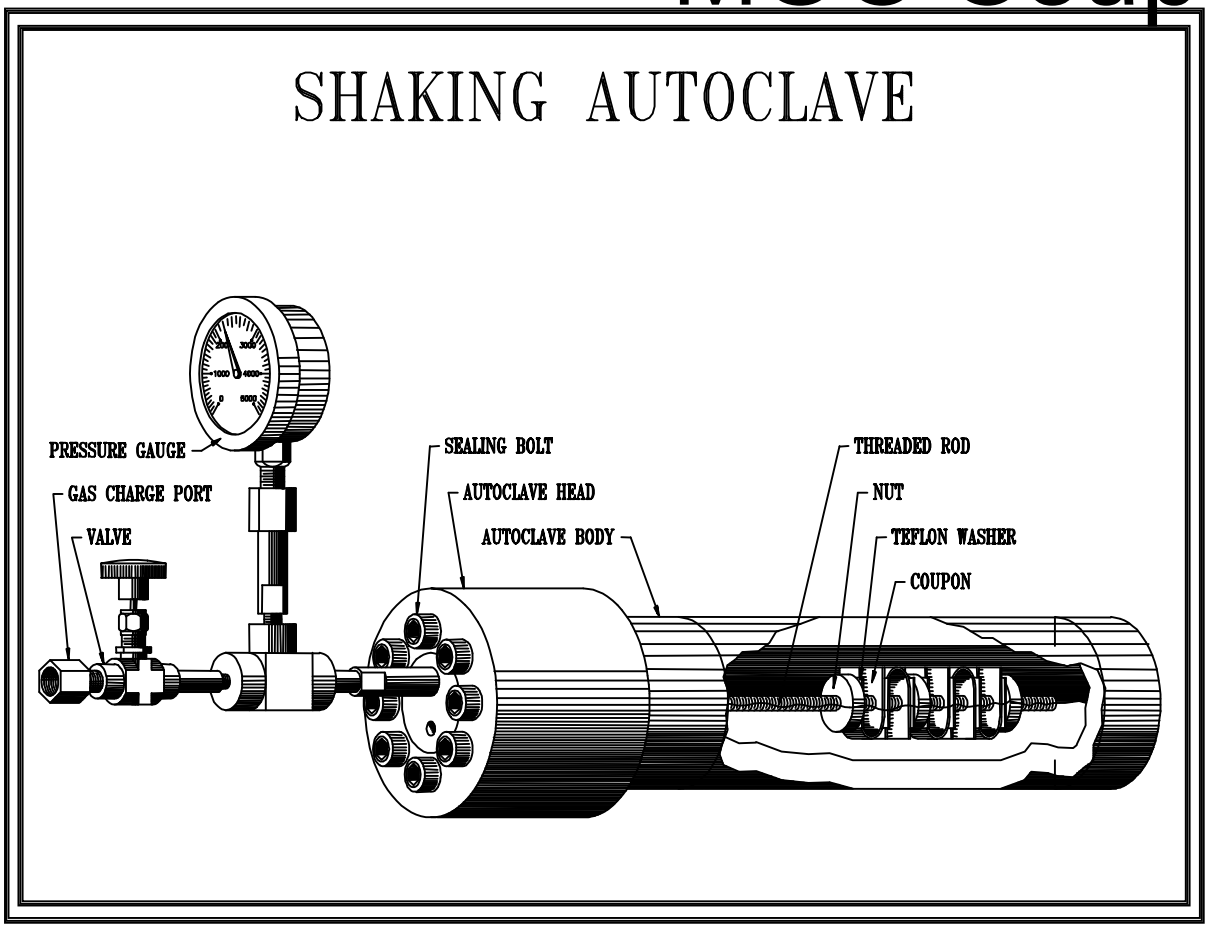

Zimpro ® WAO System

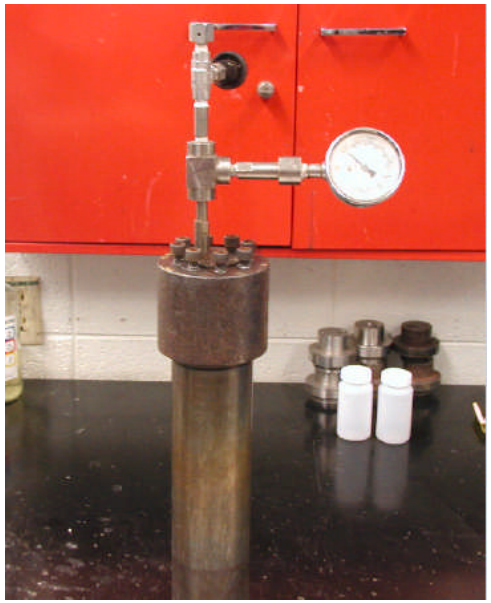

Environmental Management

safety ❖ performance ❖ cleanup ❖ closure

Technical Strategy/Approach

- Bench-scale simulant testing – Completed
  - Batch autoclave experiments
  - Demonstrate destruction of TPB (< 2 mg/L)
  - Short-duration (100-hour) MOC test
- Integrated continuous-flow pilot-scale simulant testing – Phase I
  - Optimize bench-scale process conditions
  - Determine off-gas composition
  - Demonstrate stable and safe steady-state operations
  - Extended (1000-hour) MOC testing
  - Provide design data for a 3 and 5-gpm full-scale system including the evaluation of process economics
- Bench-scale radioactive waste testing (not funded by EM-21)
  - Confirm destruction efficiencies and rates using a batch autoclave unit

Technical Strategy/Approach

- Integrated continuous-flow pilot-scale simulant testing – Phase II
  - Includes off-gas treatment system and related equipment e.g., HEPA filter, blower, etc.
  - Demonstrate off-gas system performance and compliance with regulatory requirements
  - Provide design data for a 3 and 5-gpm full-scale system especially the off-gas system
- Integrated continuous-flow engineering-scale (0.1 to 1.0 of full-scale) simulant testing

Technical Strategy/Approach

- Phase I and Phase II pilot-scale testing are being combined to help accelerate the schedule and possibly reduce cost
- Justification is being developed to skip or waive the engineering-scale testing
  - Scale-up factors of up to 2,300 are typical because WAO reactor dynamics are well understood based on decades of experience.
  - Full-scale systems (up to 260 gpm) are also built for some applications (e.g., municipal sludge) without pilot-scale testing

Completion of the tests outlined will bring WAO to a Technology Readiness Level (TRL) of 6

Technical Status and Results

- Schedule, cost estimate, and three test plans (for the tests outlined earlier) necessary to bring WAO to a TRL of 6 have been developed
- Preparation of components needed to make the Tank 48H simulant is complete
- Award of contract for the WAO Phase I pilot-scale/MOC testing is complete
- Plans are underway for the batch bench-scale radioactive waste testing (not funded by EM-21)

Path Forward

- Strive to bring WAO to TRL of 6 by
  - Completing pilot-scale (combined Phases I & II) and 1000-hour MOC testing
  - Completing bench-scale radioactive waste testing
  - Developing a justification to waive the engineering-scale testing

Target date is March 2009

Project Impact

- WAO has the ability to treat the Tank 48H waste in a relatively short time and make the tank available to support SWPF operations
  - Up to 5-gpm unit will fit in the facility dedicated for the Tank 48H treatment project
    - 1, 3 and 5-gpm units with 75% operational time at 1:1 feed dilution will treat Tank 48H Waste (250,000 gal) in about 15, 5 and 3 months respectively
    - Lower dilutions will even result in shorter treatment times