NuVision Engineering Inc. Support to EM-21 Program

FY2008

Erich J. Keszler, PE
NuVision Engineering Inc.

Agenda

- NuVision Engineering
  - Capabilities and Experience
- International Agreement
- Current and future Waste Processing projects

Executive Summary

- NuVision Engineering
  - Formerly AEA Technology
    - Responsible for ‘all things nuclear’ in UK
    - Equivalent to UK National Laboratory

- International Agreement
  - In place with USDOE since 1996 to transfer and localize energy and environmental technologies from UK to US
    - extremely successful program
      - 25 deployments in EM program in 4300 days
        - 1 deployment every 5-6 months
      - significant cost & schedule savings
      - improved worker safety
    - FY08 funding: $4.92 M

NuVision Engineering

- Formerly AEA Technology
  - Responsible for ‘all things nuclear’ in UK
  - Equivalent to UK National Laboratory
- Long heritage in nuclear technology
- Current offices : PA, NC, WA, TN, VA
- Owned by UK-based Private Equity firm Vision Capital
- Successful track record in the EM program

NuVision Engineering - Today

- Provider of specialized consulting, engineering & products and services to the nuclear industry
  - Consulting
  - Design
  - Research, development, and demonstration
  - Equipment manufacture & testing (CE, UL & UL(C) compliance)
  - Equipment installation
  - Equipment commissioning and operation
  - Turnkey project management & execution
- In summary - everything from technical consulting to turnkey, in-the-field project execution

The International Agreement (IA)

- Initiated in 1996 under the auspices of a Government-to-Government MoU on Energy Research
- Objective is to take technologies and methodologies that have been proven in the UK and apply them to problems in the US
- Focus has been on EM program to apply ‘know-how’, and to demonstrate & deploy technologies and approaches proven in UK
- Originally funded at $2M in FY96. Increased to $4M in FY01 and has been funded at $4-5M ever since

IA Project Funding Transition

- International Agreement funds are used to
  - demonstrate the 'state of the possible'
  - minimize the risk to the site of using a non-baseline approach or technology
  - fast track procurement and accelerate schedule
- Typically three phases to a cleanup project
  - Phase I: Proof-of-principle, conceptual design
  - Phase II: Detailed design, large scale demo, fabrication
  - Phase III: Deployment/implementation
- Typically International Agreement funds all of Phase I, some (30-70%) of Phase II and little (if any) of Phase III

IA Successes for EM Program - Deployments

- 25 full scale deployments of fluidic mixing, sampling and retrieval systems
  - Oak Ridge, Los Alamos, Savannah River, Idaho, Mound, Hanford, Fernald
- Demonstrated major cost and schedule savings
- Continually addressed similar problems at multiple sites
- All participants benefit
  - NuVision Engineering gets the work
  - Site gets cleanup project completed on or ahead of schedule at a reduced cost
  - DOE and Congress achieve desired progress

EM-21 Waste Processing Overview

- Addressing high priority EM21 and EM23 projects as well as Departmental Strategic Initiatives
- 10 projects approved and underway (EM21)
  - Engineering Scale Test Facility
  - Fluidic sampler for tank 50 at SRS
  - Top access retrieval of sludge from K-Basin binsets
    - Proof-of-principle demonstration
  - Prioritization of Waste Processing Program
  - Cooling coils remediation in large tanks
  - Waste retrieval & review knowledge center
  - Support to Cementitious Barrier Project
  - Improved low level mixing for enhanced chemical cleaning
  - Demonstration of improved articulated sluicing nozzle(s)
  - Alternative tank remediation and disposal

EM-21 Waste Processing Overview

- 8 projects in discussion
  - HLW transportation analysis
  - Top access retrieval of sludge from K Basin binsets
    - Large scale demonstration
  - Single shell tank structural integrity assessment
  - Pipeline unplugging demonstration on abandoned line
  - Single system tank retrieval and closure
  - In tank pump screen performance characterization
  - Multi-depth sampling system
  - Program reporting and data management

Waste Processing Projects

- Design and fabrication of an Engineering Scale Test Facility
  - Facilitate Technology Development
  - 20’ diameter, variable depth (5,10, 15 or 20’) test tank
  - Used for:
    - Technology demonstration, operator training, rapid response trouble shooting, mock up / dry runs to optimize in-field performance
  - Installed and operational by August ‘08
  - Significant interest from tank farm contractors and BNI

Waste Processing Projects

Waste Processing Projects

- Sampler design & supply for Tank 50
  - More representative sampling data at various points will enable faster throughput of wastes
  - No requirement to shut off mixer pumps
  - Safer operations
    - not a bottle on string, no maintenance
  - Improvement on previous design through lessons learned

Waste Processing Projects

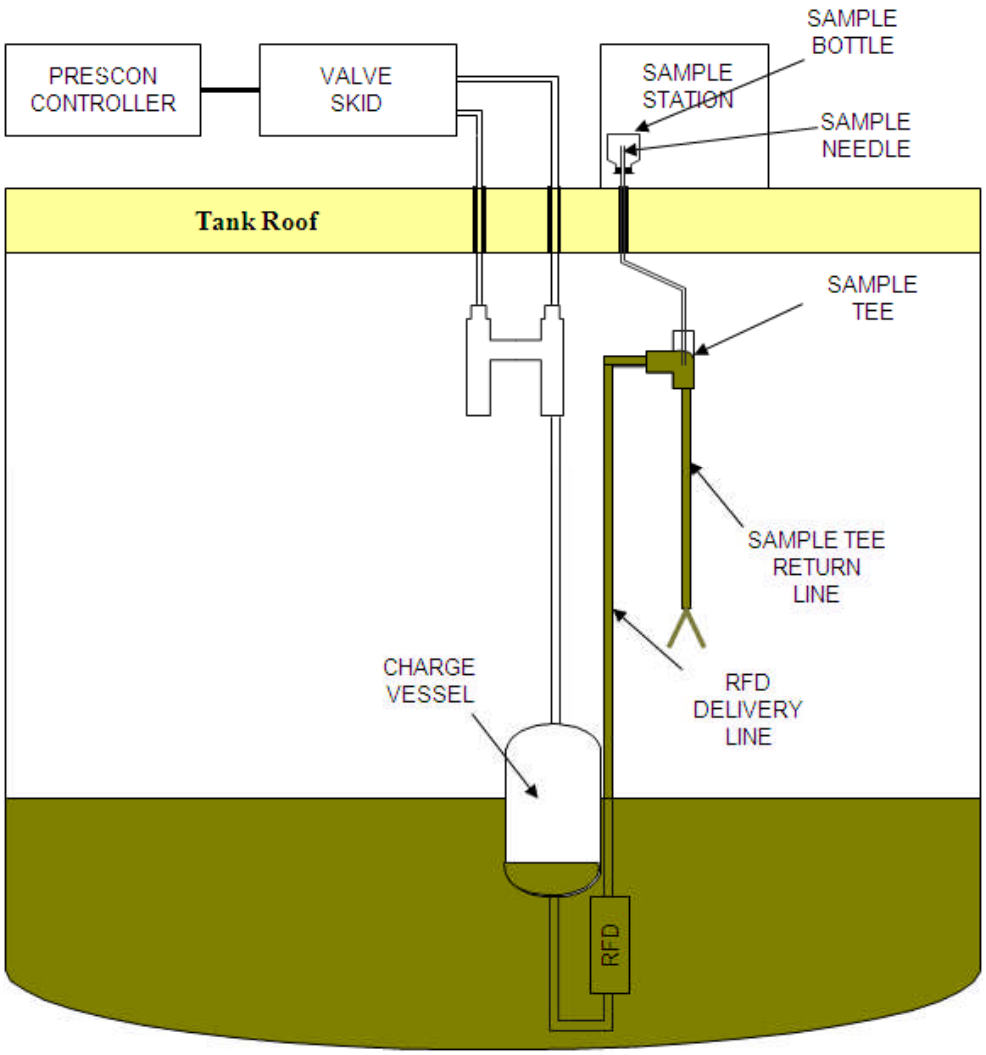

Waste Processing Projects

- Waste retrieval & review knowledge center
  - Supports EM strategic initiative for Reliable and Efficient Waste Retrieval Technologies
  - Development of searchable, web based retrieval technology database
  - Identifying what has worked, where and why
  - Incorporates all data including TFA historical information
  - Integrated with SRNL
- Cooling Coil Remediation in Large Tanks
  - Supports EM strategic initiative for Enhanced Tank Closure Processes
  - Improved waste retrieval, Coil remediation and Tank closure
  - Follow on effort from FY07 feasibility study
  - Conceptual approaches developed and agreed with site

Cooling Coil Concepts

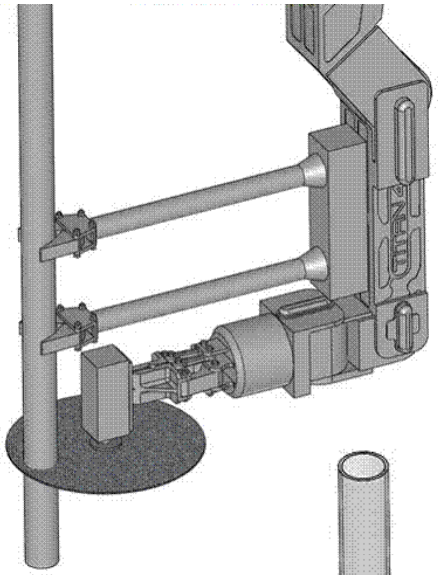

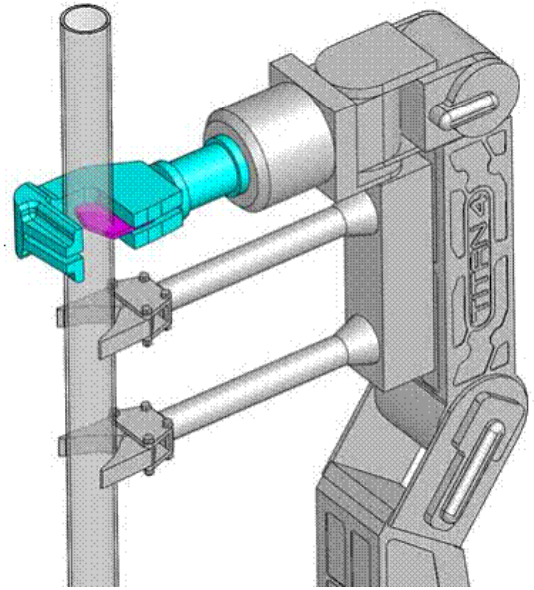

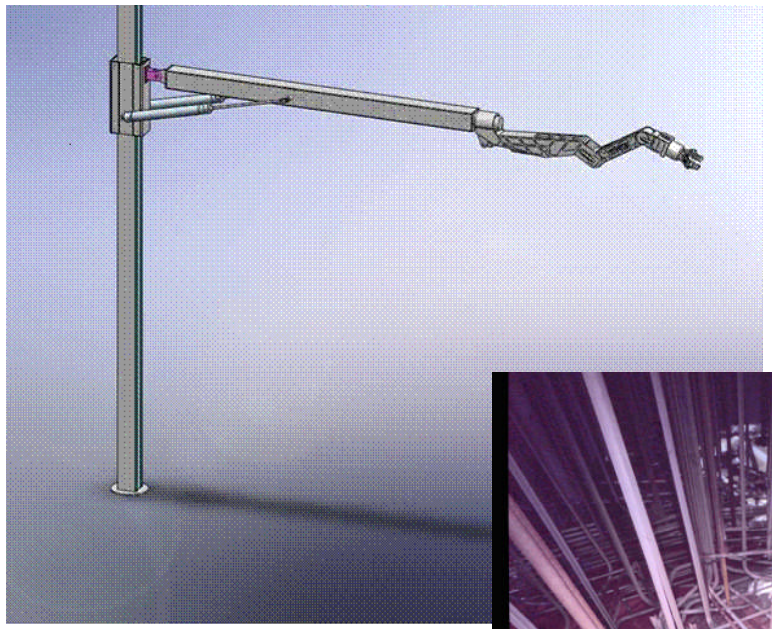

Waste Processing Projects

- Retrieval of sludge from K-Basin bin sets
  - Supports EM strategic initiative for Reliable and Efficient Waste Retrieval Technologies
  - Alternative approach to retrieval and transfer of sludge from pond containers
  - Baseline approach (bottom access manifold system) deemed too immature
  - 'Top access' approach proposed and proven on small scale
  - Currently discussing large scale demonstration work

- Prioritization of Waste Processing Program
  - Supports EM's effort to develop a structured, defensible process for selecting waste processing tasks
  - Implementation of formalized prioritization process to ensure maximum value for money
  - Pilot Program in FY07, lessons learned applied to FY08
  - Workshop scheduled July 29th-31st

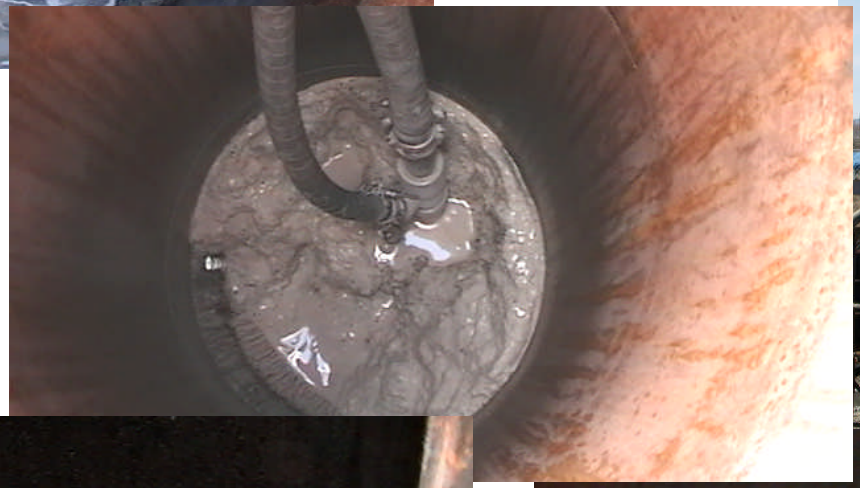

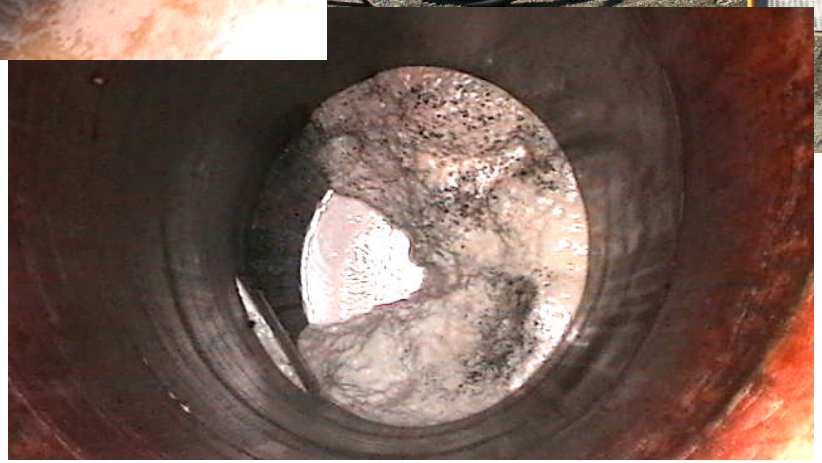

Waste Processing Projects

- Support to Cementitious Barrier Partnership
  - Supports EM strategic initiative for Enhanced Tank Closure Processes
  - Summary of UK and International experience and approach to justification and regulation of long term cemented wasteform performance
  - Leveraging UK roots; Optional workshop in UK

- Alternative tank remediation and disposal
  - Supports EM strategic initiative for Enhanced Tank Closure Processes
  - Stabilization of waste then reduction and removal of tank
  - Using C Tank farm at Hanford for baseline
  - Presentation made to EM21 Office Director 7/22
  - Next phase approved and ongoing

Waste Processing Projects

- Improved low level mixing and retrieval for enhanced chemical cleaning
  - Supports EM strategic initiative for Enhanced Tank Closure Processes
  - Improved approach to oxalic acid heel dissolution and pump out at 8-12” from tank floor
  - Challenge is to refresh the acid / sludge boundary layer in 80’ diameter tank at low levels.

- Demonstration of improved articulated sluicing nozzle(s)
  - Supports EM strategic initiative for Reliable and Efficient Waste Retrieval Technologies
  - Completed project initiation activities
  - Currently focused on developing multiple prototype concepts that incorporate technology elements adapted from external industries.

FY08 Summary Highlights

- Focus on high priority issues
  - Waste retrieval
  - Tank remediation and closure
- Currently finalizing remaining projects for FY08 program
- Potential projects in excess of $7M (against a budget of $5M)
- International Agreement continues to be a cornerstone of the EM20 program, supporting its mission with positive results.