Small Column Ion Exchange System
SR 031601

Paul Taylor
Oak Ridge National Laboratory

Environmental Management
safety ❖ performance ❖ cleanup ❖ closure

www.em.doe.gov

Presentation Outline

- **Project Description**
- **Technical Strategy/Approach**
- **Technical Results and Status**
- **Project Impact**

Project Description

- SCIX project was designed to treat SRS salt waste for on-site disposal as saltstone
- The salt waste is the critical path for tank closure at SRS, and closing tanks early greatly reduces cost (~$100M/yr)
- Project started in 6/03 (Phase I) and 11/03 (Phase II)
- In 2004, SRS was directed to focus on CSSX process, but SCIX development continued as an alternative, thanks to efforts of Chet Miller and Pat Suggs in particular
- Project redirected to reduce technical uncertainties associated with the new spherical RF resin in 2008

Project Description – Technical Strategy/Approach

- The original goal, starting in 2003, of the SCIX project was to design, build, and deploy an ion-exchange system to treat low curie salt at SRS
- The second iteration (2007) was to design a system that could treat a wider range of SRS tank waste to meet lower effluent limits, using two columns in series
- The third iteration (5/08) is to perform laboratory tests to reduce the technical risks associated with the ion-exchange system, particularly with the new RF resin

Technical Status and Results

- Original concept was for a single CST column to treat low-curie salt solution to meet proposed Saltstone WAC of 0.08 Ci/gal
- Completed:
  - Performance modeling
  - Implementation evaluation
  - Consolidated Hazard Analysis
  - 100% Design for all modules
    - 28-inch diameter column, 13-ft bed depth
    - Water-cooled (6-inch diameter central; 4 exterior tubes)
    - Fit in 36-inch diameter riser (48-inch upper section)
  - Development and testing of radiation-hardened rotary microfilter

Original concept for SCIX installation in SRS HLW Tank Risers

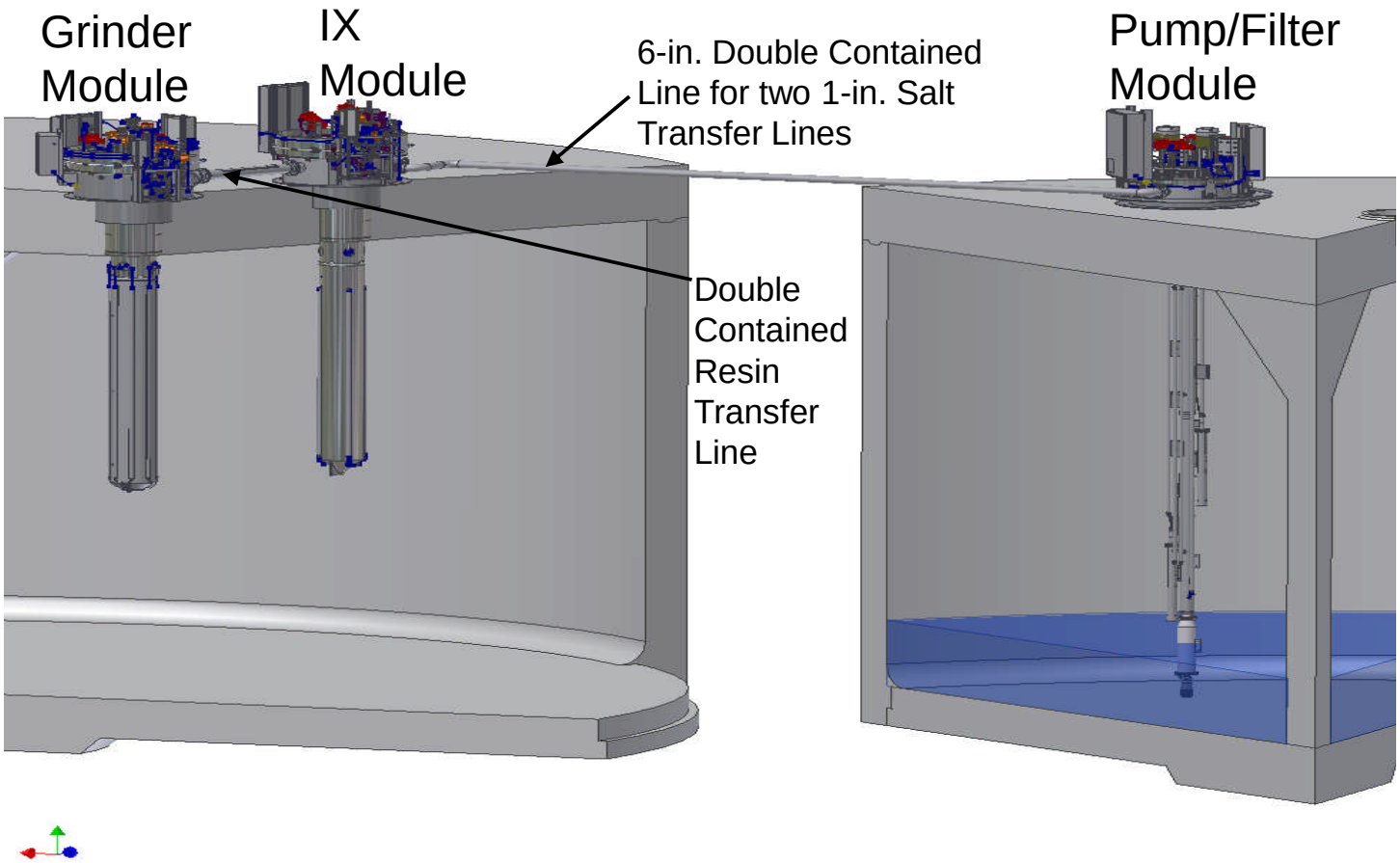

Pump/Filter Module

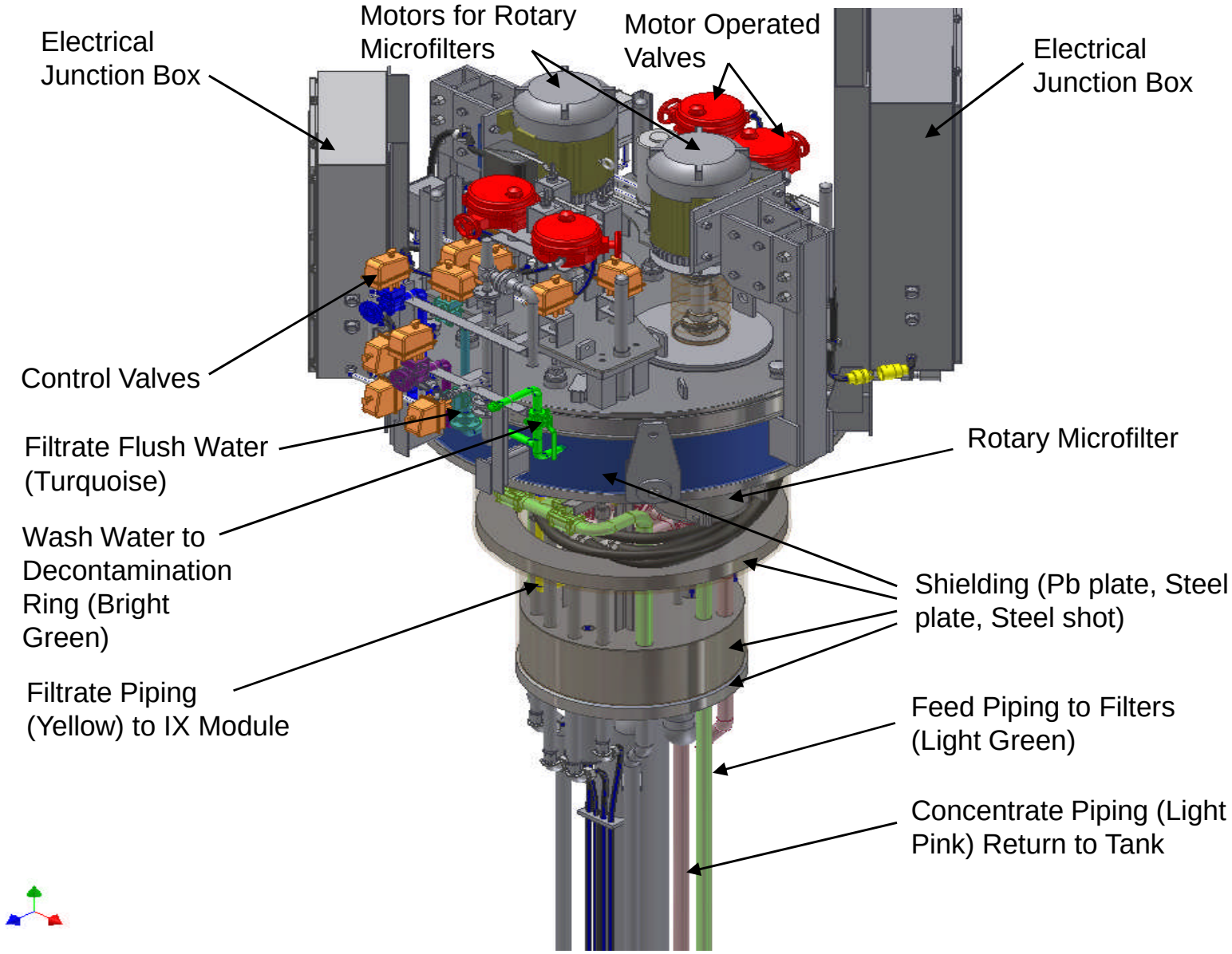

Ion Exchange Module

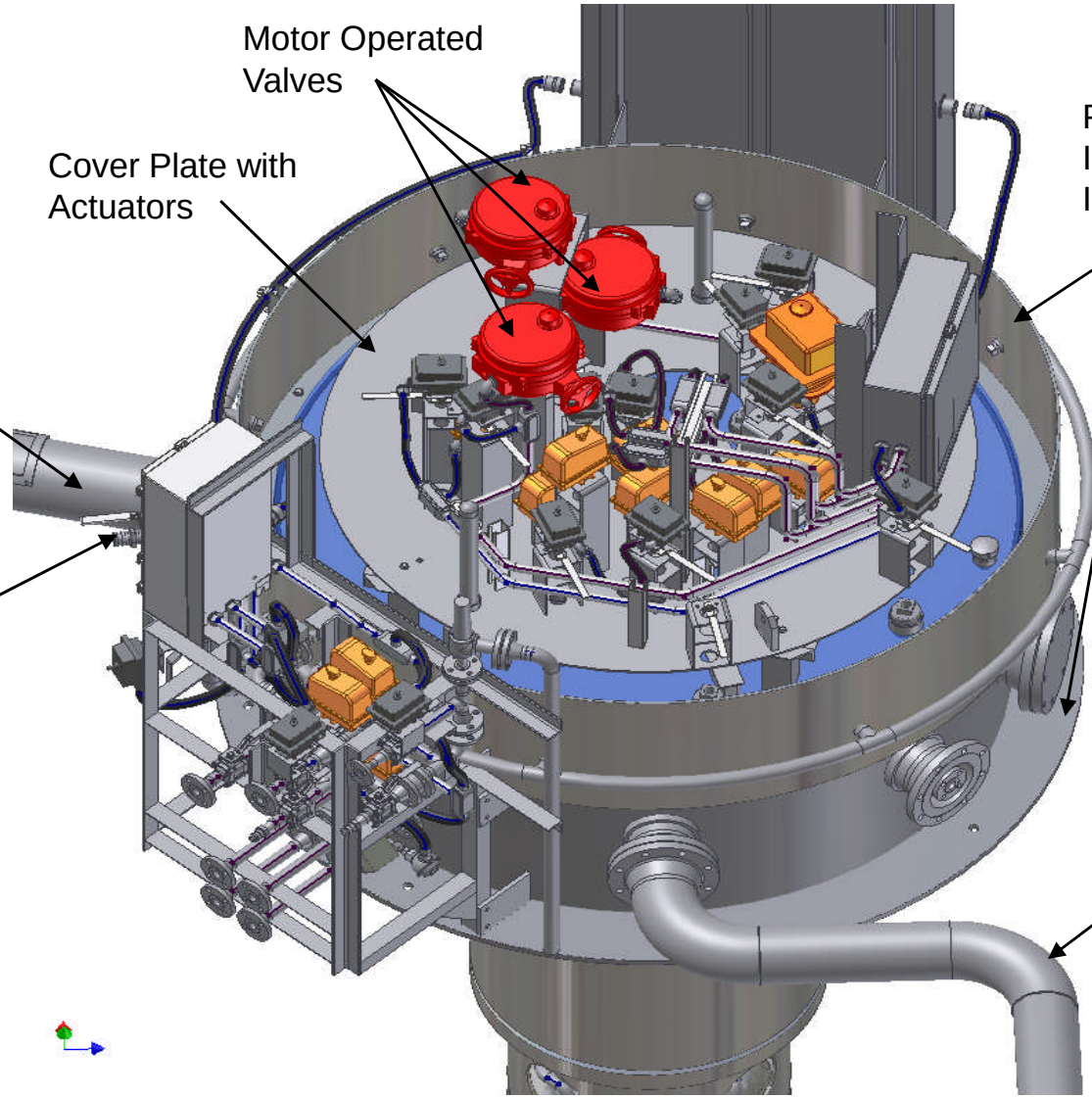

Technical Status and Results (Cont.)

- Plan to build and install SCIX system at SRS restarted in 2007
- Use two columns in series to meet 45 nCi/L ^{137}Cs limit while treating wide range of wastes
- Determine if more rotary microfilters can be used to increase flow rate of system
- Engineering evaluation for RF resin vs. CST
- Preliminary Consolidated Hazards Analysis and Conceptual Safety Design Report
- Waste Determination letter at SRS does not currently allow ion-exchange to be used to treat tank waste

Revised Concept for SCIX Deployment

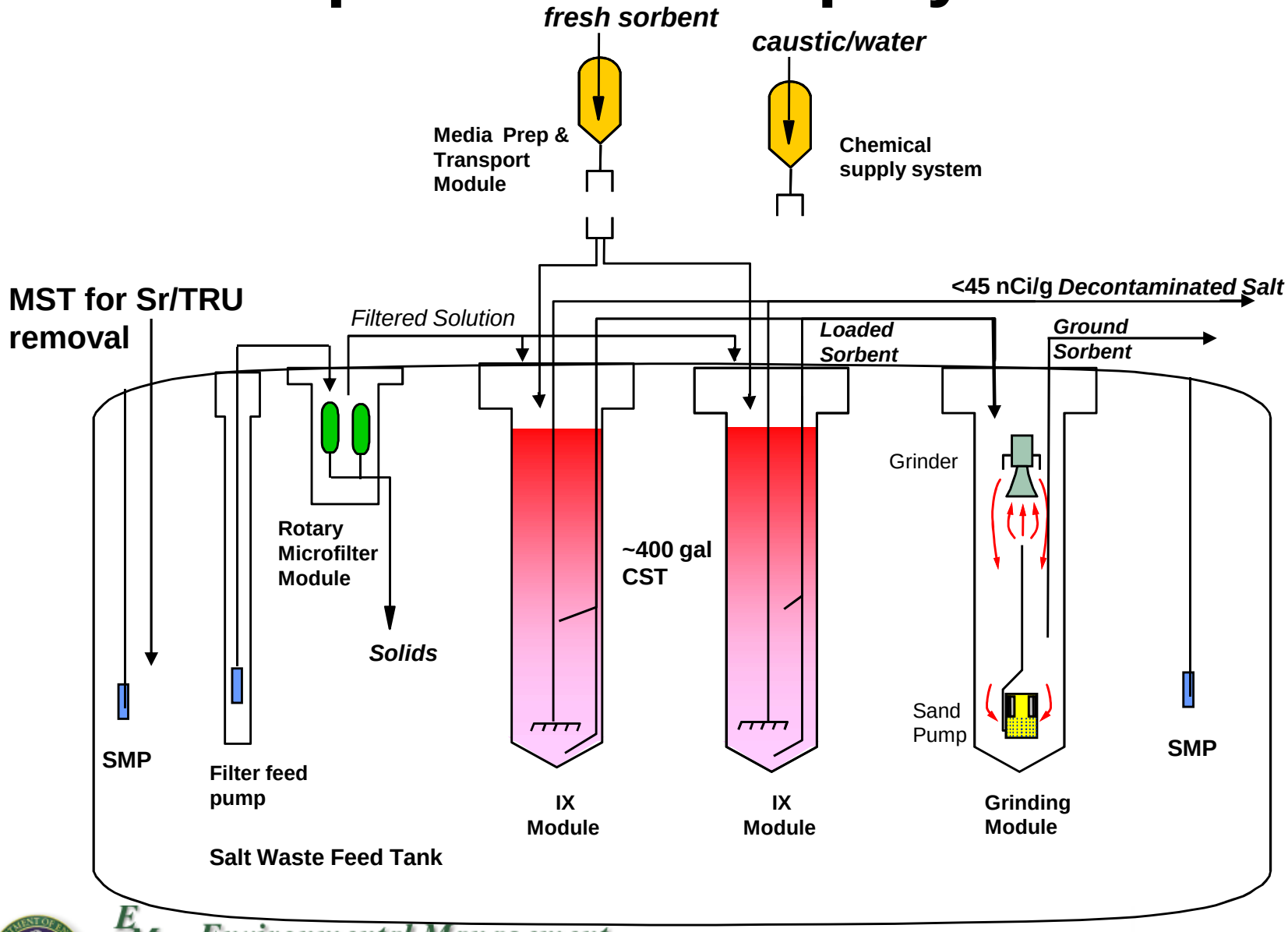

Four Rotary Microfilters Will Fit in Larger Riser

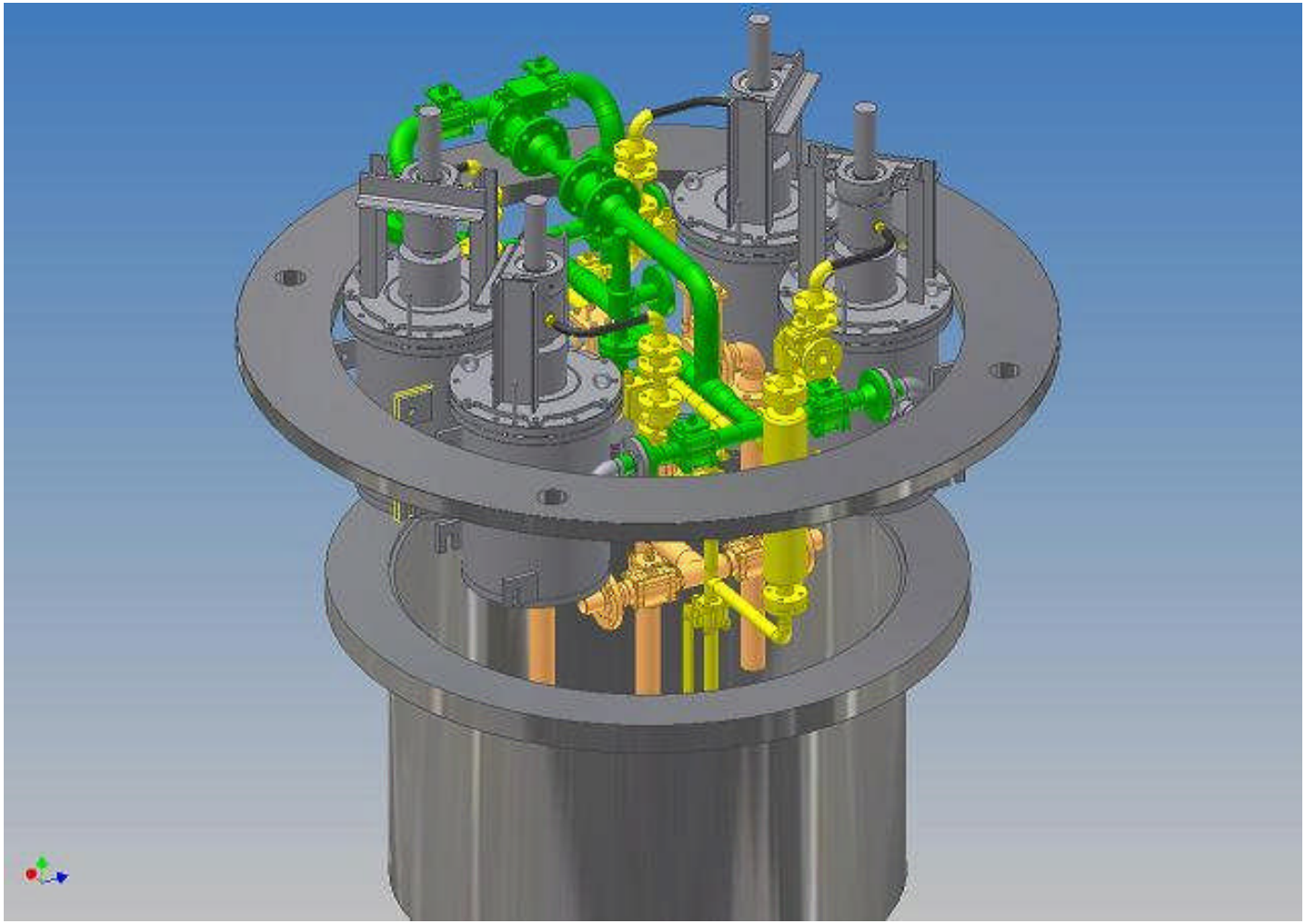

Project Funds Reprogrammed to Support Laboratory Testing to Reduce Technical Uncertainties

- Reduce nitrate and/or volume in RF resin elution stream, to reduce impacts on DWPF
- Determine if formaldehyde or other organics leach from RF resin
- Improve equilibrium model for RF
- Determine impact of high radiation doses
- Perform actual waste test using RF
- Determine if other nuclides, which can impact safety classification, load on CST and RF

Tests to Reduce Nitrate/Volume of Elution

- Baseline elution (0.5 *M* HNO_3)
- Use 0.5 *M* HNO_3 to titrate resin, then:
  - 0.05 *M* HNO_3
  - recirculate 0.5 *M* HNO_3
  - staccato flow with 0.5 *M* HNO_3
- Use 0.5 *M* Formic acid
- Use 0.8 *M Boric acid*
- Use 0.2 and 0.1 *M* HNO_3
- Use lower flow rate of 0.5 *M* HNO_3

Experimental Setup For Elution Testing

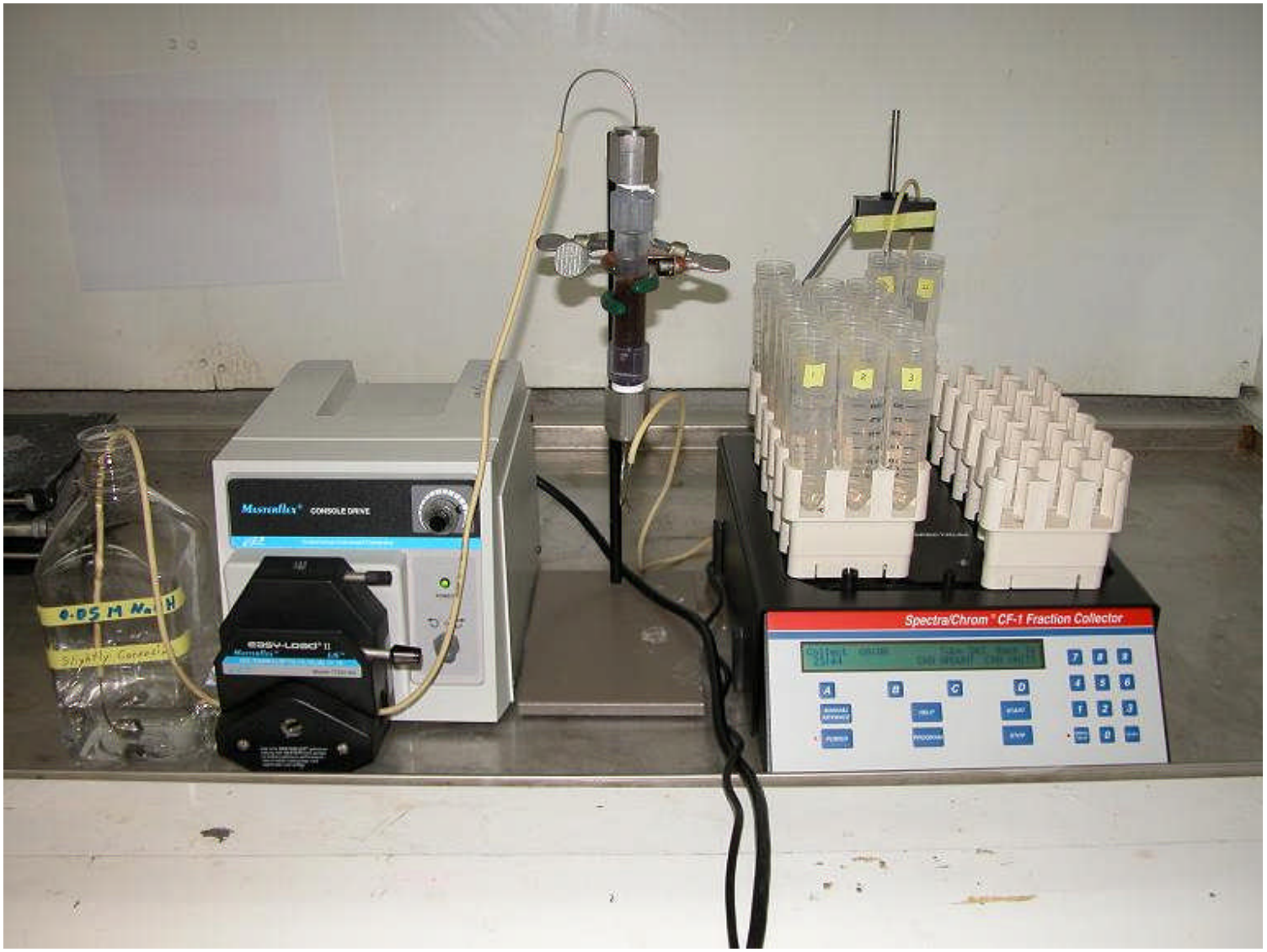

Project Impact

- Single column SCIX system has been designed
- Consolidated Hazard Analysis completed
- Rotary microfilter that was modified for radiation hardness has been built and tested
- Testing of elution methods to reduce nitrate generation are in progress