# External Technical Review of ARROW-PAK Container

**August 2007**

# External Technical Review of ARROW-PAK Container

This Page Intentionally Left Blank

# External Technical Review of ARROW-PAK Container

## EXTERNAL TECHNICAL REVIEW TEAM

8/10/07
Date

Steven P. Schneider
Office of Environmental Management
U.S. Department of Energy
Review Team Leader

8-14-07
Date

Rod E. Arbon, Ph.D.
Bechtel BWXT Idaho
Review Team Deputy for
Inventory Review

8-13-07
Date

Yung Liu, Sc.D.
Argonne National Laboratory
Review Team Deputy for
Package Review

8/10/7
Date

James M. Shuler, DPA
Office of Environmental Management
U.S. Department of Energy

8-13-07
Date

Vikram N. Shah, Ph.D.
Argonne National Laboratory

8/10/07
Date

Alton Harris
Office of Environmental Management
U.S. Department of Energy

8/13/07
Date

Shiu-Wing Tam, Ph.D.
Argonne National Laboratory

8-15-07
Date

Gerald A. O'Leary
Los Alamos National Laboratory

8/14/07
Date

Larry Fischer
Lawrence Livermore National Laboratory

8-16-07
Date

for Gerald MoK

Gerald Mok, Ph.D.
Lawrence Livermore National Laboratory

# External Technical Review of ARROW-PAK Container

This Page Intentionally Left Blank

# External Technical Review of ARROW-PAK Container

## CONTENTS


ACRONYMS ..... v

EXECUTIVE SUMMARY ..... vii

1.0 INTRODUCTION/BACKGROUND ..... 1-1

1.1 SAFE AND COMPLIANT CH-TRU WASTE SHIPPING ..... 1-1

1.2 HIGH-WATTAGE WASTE ..... 1-1

1.3 ARROW-PAK DESIGNED USE ..... 1-2

1.4 SCOPE OF REVIEW ..... 1-4

2.0 ARROW-PAK TECHNICAL REVIEW ..... 2-1

2.1 REGULATORY REQUIREMENTS AND NRC GUIDANCE FOR PACKAGING CERTIFICATION ..... 2-1

2.1.1 DOT Regulation: 49 CFR 173 ..... 2-2

2.1.2 NRC Regulation: 10 CFR 71 ..... 2-2

2.1.3 NRC Guidance for Package Certification ..... 2-4

2.2 DESIGN BASIS ..... 2-5

2.2.1 Structural Evaluation ..... 2-7

2.2.2 Thermal Evaluation ..... 2-9

2.3 NRC REVIEW ..... 2-10

2.4 INDEPENDENT ASSESSMENT ..... 2-21

2.4.1 Functional Requirements for Overall Compliance ..... 2-21

2.4.2 Material Properties ..... 2-23

2.4.3 Deflagration Testing ..... 2-24

2.4.4 Technical Limitations ..... 2-26

2.5 SUMMARY AND CONCLUSION ..... 2-30

3.0 OTHER REGULATORY AND MANAGEMENT APPROVALS ..... 3-1

3.1 ENVIRONMENTAL PROTECTION AGENCY ..... 3-1

3.2 NEW MEXICO ENVIRONMENT DEPARTMENT ..... 3-1

3.3 DOE HEADQUARTERS/CARLSBAD FIELD OFFICE ..... 3-1

3.4 DEPARTMENT OF TRANSPORTATION ..... 3-2

4.0 TRU WASTE INVENTORY REVIEW AND ASSESSMENT ..... 4-1

4.1 TOTAL TRU WASTE INVENTORY ..... 4-1
4.2 CH-TRU HIGH-WATTAGE WASTE ..... 4-3
4.3 WIPP SHIPPING INITIATIVES FOR HIGH-WATTAGE WASTE ..... 4-4
4.3.1 Regulatory Approvals (Certificate of Compliance Revisions) ..... 4-4
4.4 CURRENT HIGH-WATTAGE WASTE ASSESSMENT ..... 4-8
4.4.1 Savannah River Site ..... 4-8
4.4.2 Los Alamos National Laboratory ..... 4-9
4.4.3 Other Sites ..... 4-9
5.0 POTENTIAL OTHER ARROW-PAK USES ..... 5-1
5.1 HIGH-FLAMMABLE VOLATILE ORGANIC COMPOUNDS (VOCS) ..... 5-1
5.2 MACROENCAPSULATION ..... 5-1
6.0 RESULTS AND RECOMMENDATIONS ..... 6-1
6.1 ARROW-PAK Technical Review Results and Recommendations ..... 6-2
6.2 TRU Inventory Review Results and Recommendations ..... 6-7
6.3 Other Results and Recommendations ..... 6-8
7.0 REFERENCES ..... 7-1
8.0 CHARTER ..... 8-1
8.1 CHARTER ..... 8-1
8.2 SCOPE OF THE REVIEW ..... 8-2
8.3 TEAM MEMBERSHIP ..... 8-2
8.4 PERIOD OF PERFORMANCE ..... 8-3
8.5 LINES OF INQUIRY ..... 8-3
8.6 APPROVALS ..... 8-5
9.0 DEFINITIONS ..... 9-1
10.0 TEAM BIOGRAPHIES ..... 10-1

## LIST OF FIGURES

Figure 1. ARROW-PAK MLLW container ..... 1-2

Figure 2. ARROW-PAK for high-wattage CH-TRU waste. ..... 1-3

Figure 3. ARROW-PAK for CH-TRU test article. ..... 1-3

Figure 4. ARROW-PAK for CH-TRU test article cut open after deflagration testing. ..... 1-4

Figure 5. (a) Empty ARROW-PAK, (b) ARROW-PAK with a 55-gallon drum and corrugated spacers inside, (c) Three ARROW-PAKs banded together inside the ICV of TRUPACT-II, (d) Three ARROW-PAKs before, and (e) After loading into the ICV. ..... 2-6

Figure 6. Impact of TRUPACT-II SAR CoC revisions on ARROW-PAK ..... 4-4

Figure 7. $^{238}$Pu mass and heat loading distribution (SRS Pad 1 TRU waste). ..... 4-8

## LIST OF TABLES

Table 1. Chronology Interactions with NRC on ARROW-PAK ..... 2-19

Table 2. WIPP CH-TRU waste anticipated inventory, by site ..... 4-1

Table 3. WIPP RH-TRU waste anticipated inventory by site ..... 4-2

Table 4. Shippable and Non-Shippable $^{238}$Pu Inventory Based on Wattage Limits After Approval TRUPACT-II-SAR Revision 19, 2001. ..... 4-3

This Page Intentionally Left Blank

## ACRONYMS

| | |
|---|---|
| AMWTP | Advanced Mixed Waste Treatment Project |
| ASME | American Society of Mechanical Engineers |
| ASTM | American Society for Testing and Materials |
| CBFO | Carlsbad Field Office |
| CoC | Certificate of Compliance |
| CFR | Code of Federal Regulations |
| CH | Contact-Handled |
| CH-TRAMPAC | Contact-Handled TRU Waste Authorized Methods For Payload Control |
| DBTT | Ductile-Brittle Transition Temperature |
| DDT | Deflagration To Detonation Transition |
| DOE | Department of Energy |
| DOT | Department of Transportation |
| EHMW | Extra-High Molecular Weight |
| EPA | Environmental Protection Agency |
| FGE | Fissile Gram Equivalents |
| HAC | Hypothetical Accident Conditions |
| HAD | High Activity Drums |
| HDPE | High-Density Polyethylene |
| ICV | Inner Containment Vessel |
| INL | Idaho National Laboratory |
| IPT | Integrated Project Team |
| LANL | Los Alamos National Laboratory |
| MLLW | Mixed Low-Level Waste |
| MNOP | Maximum Normal Operating Pressure |
| MNOT | Maximum Normal Operating Temperature |
| MSDS | Material Safety Data Sheet |
| NCT | Normal Conditions Of Transport |
| NDE | Non Destructive Examination |
| NMED | New Mexico Environment Department |
| NRC | Nuclear Regulatory Commission |
| NUREG | Abbreviation For NRC Report title |
| OCV | Outer Containment Vessel |
| ORNL | Oak Ridge National Laboratory |
| PCP | (DOE Headquarters) Packaging Certification Program |
| PCV | Primary Containment Vessel |
| PSI | Pounds Per Square Inch |
| PSIA | Pounds Per Square Inch Absolute |
| PSIG | Pounds Per Square Inch Gauge |
| QA | Quality Assurance |
| RAI | Requests for Additional Information |
| RCRA | Resource Conservation and Recovery Act |
| RH | Remote-Handled |

| | |
|---|---|
| SAR | Safety Analysis Report |
| SCV | Secondary Containment Vessel |
| SRS | Savannah River Site |
| STP | Standard Temperature and Pressure |
| SWG/HPV | Special Working Group/High Pressure Vessels |
| TRU | Transuranic |
| TRUPACT-II | Transuranic Package Transporter-II |
| VOCs | Volatile Organic Compounds |
| WAC | Waste Acceptance Criteria |
| WCRRF | Waste Characterization, Reduction, And Repackaging Facility |
| WIPP | Waste Isolation Pilot Plant |
| WTS | Washington TRU Solutions, LLC |

# External Technical Review of ARROW-PAK Container

## EXECUTIVE SUMMARY

The Waste Isolation Pilot Plant (WIPP) facility, located in the southeastern New Mexico, is the first and only operating U.S. deep geologic repository designed for the permanent disposal of defense-related transuranic (TRU) waste. The WIPP facility includes disposal rooms mined 2,150 feet (655 meters) underground in a 2,000-foot-thick (610-meter) salt formation that has been stable for more than 200 million years. The WIPP Land Withdrawal Act, Public Law 102-579, as amended, sets the overall disposal capacity of WIPP at 6.2 million cubic feet (175,564 $m^3$) of TRU waste. TRU waste is categorized as contact-handled (CH) if the surface dose rate is ≤ 200 millirem per hour or as remote-handled (RH) if the surface dose rate is >200 millirem per hour.

CH-TRU waste transported to the WIPP is required to be shipped in an Nuclear Regulatory Commission (NRC)-approved Type B packaging, such as the Transuranic Package Transporter-II (TRUPACT-II) or HalfPACT. For safe and compliant shipping, within a TRUPACT-II or HalfPACT, the governing document is the Contact-Handled Transuranic Waste Authorized Methods for Payload Control (CH-TRAMPAC). [(1)] It defines the requirements (e.g., nuclear and chemical properties) each container must meet prior to transportation.

Some of the waste destined for WIPP cannot currently be shipped in the TRUPACT-II or HalfPACT shipping containers because it generates or has the potential to generate hydrogen gas that exceeds the limits set by the NRC. This waste, referred to as high-wattage waste, has the potential to exceed CH-TRAMPAC defined gas generation levels.

The ARROW-PAK container was designed by BOH Environmental to provide a payload container for high-wattage CH-TRU waste. The ARROW-PAK is a cylindrical container constructed of high-density polyethylene, a thermoplastic material. The ARROW-PAK is designed to hold one high-wattage CH-TRU waste 55-gallon drum and to withstand any significant hydrogen deflagration event. Once loaded and sealed with a fused joint, three ARROW-PAK containers would be placed into one TRUPACT-II for shipment to WIPP. Upon arrival at the WIPP the ARROW-PAK and contents would be emplaced in the repository intact.

In 2001, the amount of high-wattage CH-TRU waste that could potentially be shipped in the ARROW-PAK was estimated to be approximately 3,000 $m^3$. Recent estimates, however, have dropped to about 40 $m^3$. Because of this significant decrease, the need for the ARROW-PAK has been questioned by the Department of Energy (DOE).

# External Technical Review of ARROW-PAK Container

The ARROW-PAK External Technical Review team was chartered to evaluate and report on two primary areas:

- The technical aspects of the ARROW-PAK container and its potential for certification by the NRC and the Department of Transportation (DOT), and

- The TRU waste inventory appropriate for use in the ARROW-PAK and the programmatic need for this package.

The results of this review will be used by DOE as one basis for proceeding with the development and use of the ARROW-PAK container.

After an extensive review of regulatory requirements, safety analysis reports, designs, test data, Requests for Additional Information (RAI) from the NRC, responses to the RAIs, TRU waste inventory estimates, and other technical information obtained by the team and provided by the Carlsbad Field Office (CBFO) and BOH Environmental, the team has determined that:

- The ARROW-PAK container does not have a high probability of success of obtaining certification from the NRC using the current approach described in the supporting documentation. The current plan does not offer assurance for NRC approval because the NRC concerns are significant and the applicant still has not addressed those concerns in several key areas. These areas include applicable design and inspection codes, cold temperature behavior of fuse joints, drop test orientations, and deflagration testing pressure and temperature.

- To increase the probability of success for NRC approval, the applicant (Washington TRU Solutions [WTS] on behalf of DOE) must revise the TRUPACT-II Safety Analysis Report Addendum to include an alternate high-density polyethylene material that has better performance at low temperatures in the ARROW-PAK design, revise the response to the NRC RAIs, and demonstrate through tests or analysis that the redesigned ARROW-PAK meets all regulatory requirements.

- The alternate high-density polyethylene material has significantly improved performance over the original grade of polyethylene. However, much work remains in materials, design, fabrication, quality assurance, and testing to demonstrate the performance and compliance with regulatory requirements of this alternate polyethylene material.

- Because the ARROW-PAK would be disposed of in a permitted facility, the Environmental Protection Agency, the New Mexico Environment Department (NMED), and DOE would also need to approve the use of the ARROW-PAK. No additional DOT approval is required.

- The high-wattage TRU waste inventory available for use in the current design of the ARROW-PAK is about 40 $m^3$. If the ARROW-PAK is redesigned and remanufactured with the alternate polyethylene material, then the high-wattage TRU waste inventory available for use in the new ARROW-PAK is increased to about 160 $m^3$. About 800 ARROW-PAK containers would be needed by the WIPP program for this higher inventory.

These results are contained in 31 observations made by the team. They were categorized as follows:

- **0 Findings** — Observations that would prevent ARROW-PAK from being certified or fully developed to meet mission needs. These observations should be considered fatal flaws and cannot be resolved.

- **15 Technical Issues** — Observations requiring resolution to ensure the ARROW-PAK will successfully meet mission needs.

- **6 Areas of Concern** — Observations that may require design modifications to the ARROW-PAK or additional testing to resolve the technical concern.

- **9 Opportunities for Improvement** — Observations that would improve the ability to meet mission needs or offer alternative solutions to technical problems.

- **1 Good Practice** — Items that are commendable and deserve recognition.

No findings (fatal flaws) were identified that would prevent the ARROW-PAK from being certified by the NRC. However, there were 15 technical issues that must be successfully resolved to obtain certification. The team also identified several opportunities for improvement that would enhance DOE's assessments of TRU waste inventories and transportation packages.

This Page Intentionally Left Blank

# 1.0 INTRODUCTION/BACKGROUND

The WIPP facility, located in the southeastern New Mexico, is the first and only operating U.S. deep geologic repository designed for the permanent disposal of defense-related TRU waste. The WIPP facility includes disposal rooms mined 2,150 feet (655 meters) underground in a 2,000-foot-thick (610-meter) salt formation that has been stable for more than 200 million years. The WIPP Land Withdrawal Act, Public Law 102-579, as amended, sets the overall disposal capacity of WIPP at 6.2 million cubic feet (175,564 $m^3$) of TRU waste. TRU waste is categorized as CH if the surface dose rate is ≤ 200 millirem per hour or as RH if the surface dose rate is >200 millirem per hour.

The current stored inventory of TRU waste is $1.253 \times 10^5$ $m^3$, which consists of $1.2 \times 10^5$ $m^3$ CH-TRU waste and $5.3 \times 10^3$ $m^3$ RH-TRU waste. In March 1999, DOE-CBFO initiated CH-TRU waste shipments to the WIPP. RH-TRU waste shipments to WIPP began in January 2007.

## 1.1 SAFE AND COMPLIANT CH-TRU WASTE SHIPPING

CH-TRU waste transported to the WIPP is required to be shipped in an NRC-approved Type B packaging, such as the TRUPACT-II or HalfPACT. For safe and compliant shipping, within a TRUPACT-II, or HalfPACT, the governing document is the CH-TRAMPAC. [(1)] It defines the requirements (e.g., nuclear and chemical properties) each container must meet prior to transportation. Containers that exceed the CH-TRAMPAC limits require remediation to bring the container into compliance or, if possible, the CH-TRAMPAC limits expanded to bound the containers' contents.

## 1.2 HIGH-WATTAGE WASTE

Some of the waste destined for WIPP cannot currently be shipped in the TRUPACT-II or HalfPACT shipping containers because it generates (or has the potential to generate) hydrogen gas that exceeds the limits set by NRC. This waste, referred to as high-wattage waste, has the potential to exceed CH-TRAMPAC defined gas generation levels based on the matrix G-value (measure of a given material's gas generation propensity) and wattage. Different matrices have different G-values as a result of the base material susceptibility for radiolytic degradation and subsequent generation of gas, particularly hydrogen. Additional relevant parameters are layers of confinement within the drum, gas release rate, shipping timeframes, wattage, and void volume within the drum. The definition of high-wattage waste has changed over time against the baseline of the wattage limits given in the CH-TRAMPAC. Many of the recent applications to the NRC were successful in increasing the quantity of high-wattage waste that could be shipped. For example, a container of waste that exceeds the wattage limit for an analytic shipping category may pass following headspace measurement or full drum testing and may be shippable without further mitigation.

## 1.3 ARROW-PAK DESIGNED USE

The ARROW-PAK, manufactured by BOH Environmental, was initially designed as a macroencapsulation treatment and disposal technology for mixed low-level waste (MLLW). The 21-foot-long ARROW-PAK used for MLLW treatment and disposal is illustrated in Figure 1.

Figure 1. ARROW-PAK MLLW container

The ARROW-PAK has been approved for treatment and disposal of MLLW by the States of Colorado, Tennessee, Utah, and Washington, as well as the DOE and the Environmental Protection Agency (EPA). The ARROW-PAK has been successfully used to treat and dispose MLLW at Oak Ridge National Laboratory (ORNL), Hanford, and EnergySolutions (formerly known as Envirocare of Utah), meeting all Resource Conservation and Recovery Act (RCRA) treatment and disposal criteria. In addition, the ARROW-PAK container is a DOT Specification 7A Type A packaging for the transportation of MLLW.

## External Technical Review of ARROW-PAK Container

Subsequent to the ARROW-PAK development as a macroencapsulation technology, CBFO began evaluating it for shipping "challenging" CH-TRU waste to WIPP, including high-wattage CH-TRU waste. High-wattage waste includes waste contaminated with $^{238}$Pu and waste highly contaminated with $^{239}$Pu. The ARROW-PAK designed for CH-TRU high-wattage waste was only six feet long (instead of 21) and was to be more robust than the MLLW macroencapsulation ARROW-PAK. As envisioned, it would be designed to withstand any hydrogen deflagration event (i.e., no consequence). The ARROW-PAK for CH-TRU high-wattage waste is illustrated in Figures 2, 3, and 4.

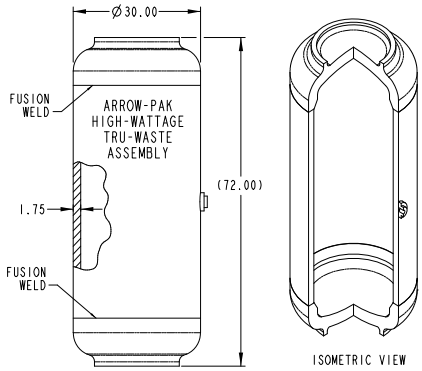


- **Dimensions**
  - **30 inch dia. By ~ 72 inch height**
  - **1.75 inch nominal wall thickness**
  - **3 inch nominal end closure thickness**
- **Empty weight approximately 525 lbs**
- **1, 804 lbs gross weight**
- **Three ARROW-PAKs per TRUPACT-II**
  - **Gross payload weight of approximately 5, 662lb**

Figure 2. ARROW-PAK for high-wattage CH-TRU waste.

Figure 3. ARROW-PAK for CH-TRU test article.

Figure 4. ARROW-PAK for CH-TRU test article cut open after deflagration testing.

The ARROW-PAK is designed to hold high-wattage CH-TRU waste in one 55-gallon drum supported by corrugated spacers. Once loaded and sealed with a fused joint, three ARROW-PAK containers would be placed into one TRUPACT-II for shipment to WIPP. Upon arrival at the WIPP the ARROW-PAK and contents would be emplaced in the repository intact. This variation of the ARROW-PAK has undergone some testing required for TRU waste transportation containers, but it has not been certified by the NRC for transport of TRU waste. Additional tests have been requested by NRC to demonstrate performance and compliance for certification. Finally, the cost for a high-wattage ARROW-PAK had been reported by BOH to be $15,000. [(2)] To date, no cost-benefit study has been performed on the ARROW-PAK.

## 1.4 SCOPE OF REVIEW

In 2003, the amount of high-wattage TRU waste that could potentially be shipped in the ARROW-PAK was estimated to be approximately 3,000 $m^3$. [(3)] Recent estimates, however, have dropped to about 40 $m^3$. Because of this significant decrease, the need for the ARROW-PAK has been questioned by the DOE.

The objectives of this review were to evaluate the ARROW-PAK container's potential for certification by the NRC and for any needed approvals from the DOT, and to evaluate the potential need for this container in DOE's waste management program. This review focused on two primary areas:

- The technical aspects of the ARROW-PAK container and its potential for certification by the NRC/DOT.
- The TRU waste inventory appropriate for use in ARROW-PAK containers and the programmatic need for this container.

The review team also evaluated other potential uses of the ARROW-PAK.

The review team examined technical data, evaluated the analyses conducted on the container, reviewed waste inventory estimates and the basis for those estimates, and interviewed key personnel. The review team also reviewed package safety analysis reports, test data, RAI from the NRC, the applicant's responses to those RAIs, plans for any additional tests required for certification, and other related information.

This review is not a management review, contract review, project baseline review, or a WIPP operations review.

The results of this review will be used to assist the DOE in determining whether to proceed with the development and use of the ARROW-PAK container or suspend work.

This Page Intentionally Left Blank

# 2.0 ARROW-PAK TECHNICAL REVIEW

By a letter dated January 31, 2005, WTS submitted an application to the NRC for an amendment to Certificate of Compliance (CoC) No. 71-9218, Revision 17 for TRUPACT-II transportation package. [(4)] The application proposed an exemption from 10 CFR 71.43(d) [(5)] for transporting ARROW-PAK waste containers in TRUPACT-II packages. There have been two rounds of NRC review of the exemption application since its submittal.

The external technical review of ARROW-PAK focuses on several areas to evaluate its potential for certification exemption as additional payload containers in the TRUPACT-II packaging by NRC. These areas are:

- Regulatory requirements and NRC guidance for packaging certification.
- Design basis of ARROW-PAK, as described in the TRUPACT-II Safety Analysis Report (SAR) Addendum for ARROW-PAK. [(6)]
- NRC review of the exemption application that includes the RAIs and the applicant's response plan.
- An independent assessment that examines the key functional requirements of the ARROW-PAK container for overall compliance with federal regulations, material properties, deflagration testing, and technical limitations of ARROW-PAK as payload containers of high-wattage TRU waste in TRUPACT-II. The independent assessment is strictly technical, without consideration of resources or needs for the ARROW-PAK. The latter needs are being addressed separately in this report.

A summary and conclusion of the technical review are provided at the end of Section 2.

## 2.1 REGULATORY REQUIREMENTS AND NRC GUIDANCE FOR PACKAGING CERTIFICATION

All regulatory requirements for packaging and transportation of radioactive materials must be satisfied before shipments can be made. The pertinent federal regulations are the DOT Hazardous Materials Regulations in Title 49 of the Code of Federal Regulations (CFR), specifically 49 CFR Part 173 [(7)], and the NRC regulations in Title 10 of CFR Part 71. [(8)] Listed in this section are the selected subpart paragraphs (shown in italics) in the DOT and NRC regulations that are the basis of the exemption application of the ARROW-PAK payload containers in TRUPACT-II, as described in the TRUPACT-II SAR Addendum for ARROW-PAK. [(6)]

The NRC guidance provided in the Regulatory Guides, Standard Review Plan, NUREG reports, and Information Notices amplify the federal regulations in 10 CFR 71 [8], and describe procedures and methods that are acceptable to the NRC staff in the review and approval of applications for packaging certification. Alternative approach may be used if judged acceptable by NRC.

It should be noted that the TRUPACT-II transportation packaging has been licensed by the NRC since 1989. The NRC CoC for TRUPACT-II defines the authorized contents, and the CoC has undergone multiple revisions by the NRC to approve requested modifications of the authorized contents. The ARROW-PAK payload container is a new sealed payload container proposed for the TRUPACT-II, and the application requests an exemption from the Federal Regulation in 10 CFR 71.43 [5], General standards for all packages, specifically Subpart paragraph 10 CFR 71.43(d) [5], for the proposed use of the ARROW-PAK for shipment of high wattage CH-TRU waste.

### 2.1.1 DOT Regulation: 49 CFR 173

173.24 General requirements for packagings and packages [9] — *(b) Each package used for the shipment of hazardous materials under this subchapter shall be designed, constructed, maintained, filled, its contents so limited, and closed, so that under conditions normally incident to transportation- (1) Except as otherwise provided in this subchapter, there will be no identifiable (without the use of instruments) release of hazardous materials to the environment.*

### 2.1.2 NRC Regulation: 10 CFR 71

71.31 Contents of application [10] — *(c) The applicant shall identify any established codes and standards proposed for use in package design, fabrication, assembly, testing, maintenance, and use. In the absence of any codes and standards, the applicant shall describe and justify the basis and rationale used to formulate the package quality assurance program.*

71.33 Packaging description [11] — *The application must include a description of the proposed package in sufficient detail to identify the package accurately and provide a sufficient basis for evaluation of the package.*

71.43 General standards for all packages [5] — *(d) A package must be made of materials and construction that assure that there will be no significant chemical, galvanic, or other reaction among the packaging components, among package contents, or between the packaging components and the package contents, including possible reaction resulting from inleakage of water, to the maximum credible extent. Account must be taken of the behavior of materials under irradiation.*

71.65 Additional requirements [12] — *The Commission may, by rule, regulation, or order, impose requirements on any licensee, in addition to those established in this part, as it deems necessary or appropriate to protect public health or to minimize danger to life or property.*

71.71 Normal conditions of transport (NCT) [13] — *(a) Evaluation. Evaluation of each package design under NCT must include a determination of the effect on that design of the conditions and tests specified in this section. Separate specimens may be used for the free drop test, the compression test, and the penetration test, if each specimen is subjected to the water spray test before being subjected to any of the other tests.*

(*b) Initial conditions. With respect to the initial conditions for the tests in this section, the demonstration of compliance with the requirements of this part must be based on the ambient temperature preceding and following the tests remaining constant at that value between -29°C (-20°F) and +38°C (+100°F) which is most unfavorable for the feature under consideration. The initial internal pressure within the containment system must be considered to be the maximum normal operating pressure, unless a lower internal pressure consistent with the ambient temperature considered to precede and follow the tests is more unfavorable.*

71.73 Hypothetical accident conditions (HAC) [14] — *(a) Test procedures. Evaluation for HAC is to be based on sequential application of the tests specified in this section, in the order indicated, to determine their cumulative effect on a package or array of packages. An undamaged specimen may be used for the water immersion tests specified in paragraph (c)(6) of this section.*

*(b) Test conditions. With respect to the initial conditions for the tests, except for the water immersion tests, to demonstrate compliance with the requirements of this part during testing, the ambient air temperature before and after the tests must remain constant at that value between -29°C (-20°F) and +38°C (+100°F) which is most unfavorable for the feature under consideration. The initial internal pressure within the containment system must be the maximum normal operating pressure, unless a lower internal pressure, consistent with the ambient temperature assumed to precede and follow the tests, is more unfavorable.*

*(c) Tests. Tests for HAC must be conducted as follows: (1) Free Drop. A free drop of the specimen through a distance of 9 m (30 ft) onto a flat, essentially unyielding, horizontal surface, striking the surface in a position for which maximum damage is expected.*

### 2.1.3 NRC Guidance for Package Certification

NUREG-1609, Standard Review Plan for Transportation Packages for Radioactive Material [15] — This document provides guidance for the review and approval of applications for packages used to transport radioactive material (other than irradiated nuclear fuel) under 10 CFR 71. [8] This document is intended for use by the NRC staff. Its objectives are to (1) summarize 10 CFR 71 [8] requirements for package approval, (2) describe the procedures by which the NRC staff determines that these requirements have been satisfied, and (3) document the practices developed by the staff in previous reviews of package applications. Section 4.5.2.3 in NUREG-1609 [15] states:

*Confirm that the application demonstrates that any combustible gases generated in the package during a period of one year do not exceed 5% (by volume) of the free gas volume in any confined region of the package. No credit should be taken for getters, catalysts, or other recombination devices.*

Regulatory Guide 7.6 Design Criteria for the Structural Analysis of Shipping Cask Containment Vessels [16] — This regulatory guide describes design criteria acceptable to the NRC staff for use in the structural analysis of the containment vessels of Type B packages used to transport irradiated nuclear fuel. Alternative design criteria may be used if judged acceptable by the NRC staff in meeting the structural requirements in 71.35 [17] and 71.36 of 10 CFR Part 71. [8] Subpart paragraph 71.35 Package evaluation refers to Subpart E Package Approval Standards and Subpart F Package, Special Form, and LSA-III Tests in 10 CFR 71; Subpart 71.36 has been deleted from 10 CFR 71. [8]

Regulatory Guide 7.8 Load Combinations for the Structural Analysis of Shipping Casks for Radioactive Material [18] — This regulatory guide describes the NCT (10 CFR 71.71) [13] and HAC (10 CFR 71.73) [14] that produce thermal and mechanical loads as the structural design bases for the packaging of radioactive material for transport. Initial conditions must be assumed before analyses can be performed to evaluate the response of structural systems to prescribed loads. This regulatory guide presents the initial conditions that are considered acceptable by the NRC staff for use in the structural analysis of Type B packages used to transport radioactive material in the contiguous United States.

NUREG/CR-1815 [19], -3019 [20], and -3854 [21] — These reports link the requirements of 10 CFR 71 [8] with the requirements of the American Society of Mechanical Engineers (ASME) Boiler & Pressure Vessel Code, including recommendations for protecting against failure by brittle fracture in ferritic steel shipping containers up to four inches thick (NUREG/CR-1815) [19], and references to the ASME Code requirements for welding (NUREG/CR-3019) [20] and fabrication (NUREG/CR-3854) [21] of the 10 CFR 71 [8] transport packagings. The same ASME Code Sections and Subsections are referenced for fabrication and welding of the components of 10 CFR 71 [8] transport packagings.

NRC Information Notice (IN) 84-72 [22] — Clarification of conditions for waste shipments subject to hydrogen gas generation states:

*(1) For any package containing water and/or organic substances that could radiolytically generate combustible gases, it must be determined by tests and measurements of a representative package whether or not the following criteria are met over a period of time that is twice the expected shipment time:*

*(a) The hydrogen generated must be limited to a molar quantity that would be no more than 5% by volume (or equivalent limits for other inflammable gases) of the secondary container gas void, if present, at standard temperature and pressure (STP) (i.e., no more than 0.063 g-moles/ft$^3$ at 14.7 pounds per square inch absolute (psia) and 70°F) or*

*(b) The secondary container and cask cavity must be inerted with a diluent to ensure that oxygen must be limited to 5% by volume in those portions of the package that could have hydrogen greater than 5%.*

## 2.2 DESIGN BASIS

The ARROW-PAK payload container is intended for use in the shipment of high-wattage CH-TRU waste in the TRUPACT-II packaging. Three ARROW-PAK containers are designed to fit onto a standard pallet in a TRUPACT-II. The ARROW-PAK is a fused welded container whose purpose is to isolate and protect the TRUPACT-II packaging from potential occurrence of a significant chemical reaction, i.e., deflagration of a greater than 5% by volume mixture of hydrogen in air.

The ARROW-PAK is a cylindrical container constructed of extra-high molecular weight, high density polyethylene (EHMW-HDPE) pipe grade material with modified torispherical heads of the same material at each end. The approximate dimensions of the ARROW-PAK container, and the inner and the outer containment vessels (ICV and OCV) of TRUPACT-II are listed below:

| | ARROW-PAK | ICV | OCV |
|---|---|---|---|
| Inside diameter/height (in.) | 26.5/63.5 | 72.625/98 | 73.625/101 |
| Outside diameter/height (in.) | 30.0/70.5 | 72.875/98 | 73.875/101 |
| Wall/head thickness (in.) | 1.765/2.5 | 0.25/– | 0.25/– |

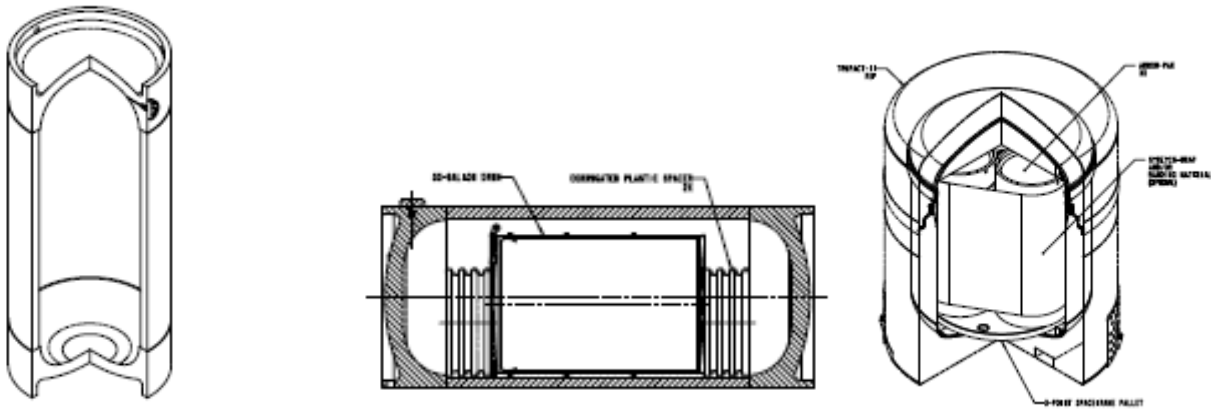

(a) (b) (c)

(d) (e)

Figure 5. (a) Empty ARROW-PAK, (b) ARROW-PAK with a 55-gallon drum and corrugated spacers inside, (c) Three ARROW-PAKs banded together inside the ICV of TRUPACT-II, (d) Three ARROW-PAKs before, and (e) After loading into the ICV.

**NOTE:** *The side orientation in (e) is a configuration for a horizontal drop test.*

The nominal weight of an empty ARROW-PAK container is 525 lb, and the maximum payload weight (i.e., one loaded 55-gallon drum) is 1,375 lb. The maximum weight of a loaded ARROW-PAK container is 1,900 lb.

The TRUPACT-II package weighs not more than 19,250 lb when loaded with the allowable contents of 7,265 lb. Three fully loaded ARROW-PAKs of 5,700 lb are below the weight of the allowable contents for TRUPACT-II.

The design basis for the ARROW-PAK container can be found in the TRUPACT-II SAR Addendum for ARROW-PAK, Rev. 0, February, 2006. [6] This document supersedes an earlier version dated January 2005, which was the original SAR Addendum [6] submitted to the NRC as part of the exemption application. The design basis associated with the structural and thermal evaluations of ARROW-PAK are summarized in the following sections:

### 2.2.1 Structural Evaluation

Mechanical Properties and Allowable Stresses — The ARROW-PAK is fabricated of pipe grade, EHMW-HDPE having an American Society for Testing and Materials (ASTM) D3350 [23] cell classification of 345444C, or better. Each digit (or letter) in the cell classification is a Specification or Test Method traceable to an ASTM Standard listed on p. 2-2 of the SAR Addendum. This pipe grade material with a cell classification number of 345444C has its hydrostatic design basis (per ASTM D2837) [24] reduced from 1,600 pounds per square inch (psi) at room temperature to 800 psi at 140°F. Similarly, the flexural modulus and tensile yield strength are reduced by half to 55,000 psi and 1,500 psi, respectively, at 140°F. The structural analysis assumed that the allowable stress to be 2/3 of the yield strength, or 1,000 psi at 140°F, which is consistent with the limits specified in Appendix 2 in Section II, Part D, of the ASME Code.

The HDPE pipes have been used as mortar tubes for fireworks for the past 20 years. Figure 2-2 of the SAR Addendum [6] shows the test data on shell performance and maximum pressure of the HDPE mortar tube that was used later in the estimate of the maximum allowable hoop stress in the HDPE mortar tube. This work has been quoted on Page 2-5 of the SAR Addendum [6] as follows:

*"The maximum HDPE mortar external temperature rise from mortar shells before rupture damage occurs is 100ºC (212ºF). This is the deflagration, external skin temperature upper thermal limit."*

*"Based on the work performed to date for 10.2 cm (4 in.) SDR-17, HDPE mortars exposed to relatively calm, cool air, it seems that the maximum service temperature (as measured on their exterior) is not more than about 75ºC (167ºF) for typical cylindrical shells, and about 85ºC (185ºF) for typical spherical shells."*

*"It may be of interest to note that, independent of shell size, all shells of approximately the optimum shell weight result in nearly constant maximum mortar pressures. For spherical shells this is roughly 200 psi, and for cylindrical shells this is roughly 700 psi."*

The following formula

$$P = 2S / (DR-1)$$

is used to estimate the maximum allowable hoop stress (S) in the HDPE mortar tube, based on the maximum pressure (P = 721 psig) and the diameter-to-thickness ratio (DR = 32.5) of the mortar tube. The temperature is assumed ambient at 73°F. Thus,

$$S = P (DR -1) / 2 = 721 (32.5 -1) /2 = 11,356 \text{ psi}$$

Applying a temperature rating factor of 0.5, which is consistent with the reduction factor used earlier on the flexural modulus and tensile yield strength of the HDPE at 140°F, obtains the maximum allowable instantaneous hoop stress of the HDPE at 140°F as

$$S_{max} \leq 11,356 / 2 = 5,678 \text{ psi}$$

Substituting $S_{max}$ into the above pressure formula and using the DR of ARROW-PAK, i.e., DR = 30 / 1.765 = 17 obtains the maximum allowable instantaneous internal pressure of the HDPE for ARROW-PAK at 140°F as

$$P_{max} \leq 2 (5,678) / (17 -1) = 710 \text{ psi}$$

<u>10 CFR 71 Performance Requirements</u> [8] — The 10 CFR 71 performance requirements for ARROW-PAK are discussed in Section 2.6 NCT and Section 2.7 HAC of the SAR Addendum. [6] Section 2.6 contains additional finite-element stress analysis of ARROW-PAK under a design-basis internal pressure of 100 psig. The long-term HDPE strength is taken as 2/3 of the yield strength, or 1,000 psi at 140°F, which gives a margin of safety of 11%. Figure 2-5 of the SAR Addendum [6] shows three sets of curves for the stress life of EHMW-HDPE at 73.4, 120 and 140°F. At 140°F and 8,800 hours (1 year), the hoop stress limit is 880 psi, and at 140°F and 100,000 hours, the hoop stress limit is 830 psi.

Section 2.6 also contains discussions of the ductile-brittle transition temperature (DBTT), analysis of fracture toughness and critical flaw size, reduced and increased internal pressure, vibration, water spray and free drop, as required by the relevant Subpart paragraphs in 10 CFR 71. [8] Whereas some of the requirements are easily satisfied by ARROW-PAK, other requirements, such as DBTT, fracture toughness, and critical flaw size, remains to be demonstrated in the applicant's response to the NRC RAI 2-1, which is discussed in Section 2.3 of this report.

Section 2.7 of the SAR Addendum [6] contains discussions of the free drop tests and immersion analysis, as required by the relevant paragraphs in 10 CFR 71. [8] The requirements in the free drop tests remain to be demonstrated in the applicant's response to NRC RAI 2-2 and RAI-2-3, which are discussed in Section 2.3 of this report.

### 2.2.2 Thermal Evaluation

The thermal evaluation in the SAR Addendum [6] considered two payload configurations for the three ARROW-PAK containers in TRUPACT-II: (1) decay heat evenly distributed within each of the three ARROW-PAKs, and (2) all decay heat in a single ARROW-PAK. Considering maximum insolation and an ambient temperature of 100ºF, and utilizing a maximum allowable average ARROW-PAK wall temperature of 140ºF, the resulting calculations show 25.2 watts total may be transported when three ARROW-PAKs contain an equal amount of decay heat (i.e., 8.4 watts each), or 22.7 watts total when all decay heat is contained in a single ARROW-PAK. To allow for the presence of sealed containers and aerosol cans in the ARROW-PAK payload, the pressure within an ARROW-PAK container shall not exceed 80% of the ARROW-PAK design pressure of 100 pounds per square inch gauge (psig) during a maximum seal period of 70 days. This requirement reduces the allowable decay heat to 6.2 watts per ARROW-PAK container and 18.6 watts per payload comprising three ARROW-PAK containers for an even decay heat distribution, and 6.6 watts per payload comprised of a single container for an uneven decay heat distribution, according to the SAR Addendum [6] (p. 10-14 under Section 10.5.3.1, Requirements).

The above decay heat wattage limits for ARROW-PAKs are well below the 40 watts maximum allowable within a TRUPACT-II. The packaging component temperatures associated with the ARROW-PAK payload should be less than those calculated for NCT and those previously determined by test for HAC, as described in the TRUPACT-II SAR.

Design Basis Temperature and Allowable Decay Heat Loads – Tables 3-1 and 3-2 of the SAR Addendum [6], show the calculated NCT temperatures for the various components of ARROW-PAKs in TRUPACT-II, respectively, with even and uneven decay heat distributions (ranging from 0 to 40 watts) for the three ARROW-PAKs in TRUPACT-II. The allowable decay heat loadings are determined, i.e., interpolated between the calculated average ARROW-PAK sidewall temperatures, 135.5°F and 144.2°F for the even decay heat distribution, and 137.4°F and 147°F for the uneven decay heat distribution; for each case based on the lower and upper temperatures, corresponding to 20 and 30 watts decay heat loads, respectively. For example, the allowable decay heat load for the even decay heat distribution in three ARROW-PAKs, based on the allowable average ARROW-PAK side wall temperature of 140°F, is

$$(30 - 20) / (144.2 – 135.5) \times (140 – 135.5) + 20 = 25.17 \text{ watts}$$

and the allowable decay heat load for an uneven decay heat distribution is

$$(30 - 20) / (147 – 137.4) \times (140 – 137) + 20 = 23.13 \text{ watts}$$

It should be noted that the calculated maximum and average ARROW-PAK side wall temperatures are 155 and 153°F for an even decay heat distribution of 40 watts, and 159 and 156°F for an uneven decay heat distribution of 40 watts, according to Tables 3-1 and 3-2 in the SAR Addendum [6], respectively.

Deflagration Testing — Section 3.6, Appendix, of the SAR Addendum [6] contains discussions of the deflagration testing of ARROW-PAK on the test configuration, initial testing conditions, test results and analysis of a stoichiometric deflagration at maximum normal operating temperature (MNOT) and the maximum normal operating pressure (MNOP) initial conditions. Pursuant to the request for additional information from the NRC, major issues remain to be addressed in the deflagration testing on the test configurations and initial conditions, which are discussed in Section 2.3 (NRC RAI 3-1) and Section 2.4.3 of this report.

## 2.3 NRC REVIEW

There are twenty-two notices of public meetings, letters, and summaries related to the exemption application of ARROW-PAK and the NRC review since October 2002. There have been two rounds of NRC review of the exemption application since its submittal on January 31, 2005. [4] The first round of RAI were issued by NRC in July 2005 [25] and consisted of 24 RAIs on the TRUPACT-II, SAR Addendum [6] for ARROW-PAK, Rev. 0, January 2005: 6 in Chapter 1, Introduction; 11 in Chapter 2, Structural; 4 in Chapter 3, Thermal; and 3 in Chapter 10, Authorized Payload Contents, of the SAR Addendum. [6] The applicant responded to the RAIs and submitted a revised SAR Addendum [6] to NRC in February 2006. [26] NRC completed its review of the revised SAR Addendum and issued seven RAIs in July 2006 [27] 3 in Chapter 1, Introduction, 3 in Chapter 2, Structural, and one in Chapter 3, Thermal, of the revised SAR Addendum. [6] The NRC cover letter [27] states *"Therefore, the staff is issuing the enclosed second and final RAI in order to be able to make a final determination on the exemption request. It is important for the applicant to note that if adequate responses to the enclosed second round RAI are not provided, the staff will terminate its review."*

On October 17, 2006, the applicant responded with a top-level plan to address each of the seven RAIs by a combination of drawing revision, analysis, material bench testing, and/or full scale testing. [28] In a meeting held at NRC on February 7, 2007 [29], the applicant presented their detailed plan in responding to the second round of RAIs. According to the summary provided by the applicant [30], *"NRC did not state that they would approve or disapprove the application for an exemption if everything discussed in the February 7 meeting is completed and included in the revised application. However, the NRC staff noted that the protocol limit for NRC's RAIs had been met, and no further RAIs would be allowed."*

The technical review team has examined closely each of the seven RAIs [27], and the applicant's plan to address each RAI [28], both in their original versions, and the additional information provided by the applicant during the course of this technical review. The additional information includes the applicant's presentation at the February 7 meeting [31], and the summaries of that meeting prepared by the WTS [30] and information from BOH Environmental. [29] The original RAIs and the applicant's response are listed below, followed by a relatively concise team evaluation of the applicant's plan for each RAI. The team's independent assessment is given in Section 2.4 of this report.

**RAI 1-1**

*Revise Drawing No.163-007, Rev. 1, to specify the type and capacity of the corrugated plastic spacers used to roughly center the 55-gallon drum along the length of the ARROW-PAK. This information is required to ensure that the spacers will have sufficient capacity to keep the 55-gallon drum in place roughly at the center along the length of the ARROW-PAK. Material information on the plastic corrugated spacers is required to evaluate structural performance of the TRUPACT-II package to meet 10 CFR 71.31 and 71.33 requirements.* [27]

**Applicant's Response**: *Drawing No.163-007 will be revised as requested to include the size (length and diameter), type, and capacity of the corrugated plastic spacers. Of note, Section D-D of drawing sheet 3 does not currently depict the spacers at their correct, as-tested length of 10.5 inches each. That view will be redrawn to scale and dimensions provided. In addition, as a part of our response to this RAI, a representative spacer will be axially crushed solid, and the resultant force deflection curve provided.* [28]

**NOTE**: The applicant presented results of the crush test of two 10.5-in long, prototypical corrugated plastic spacers. [31] The force-deflection curve shows high initial peak load to initiate crushing, relatively flat load up to 50% strain, and sharply increased load above 50% strain, which is typical of the behavior of impact limiter material. The corrugated spacer, after being crushed to solid height, returned to ≈ 85-90% of its original length upon load removal.

**Team evaluation**: The applicant has not provided the type and material specification for the corrugated plastic spacers. The crush results of the prototypic specimens may not be representative of the 18-in inside diameter, 10.5-in long corrugated plastic spacers. The geometry of the spacer and its deformation may affect hydrogen deflagration inside ARROW-PAK. (See team evaluation of applicant's response plan for RAI 3-1.)

**RAI 1-2**

*Explain how the 55-gallon drum will remain in its position at the center during the transport and handling, when the plastic spacers are not restrained at the other end. Also, verify that the configurations for HAC tests are consistent with the configurations shown on the drawings. Information on the use of the plastic corrugated spacers is required to evaluate structural performance of the TRUPACT-II package to meet 10 CFR 71.31 and 71.33 requirements.* [27]

**Applicant's Response**: *A discussion of the location of the 55-gallon drum during NCT and HAC will be provided as requested. The maximum amount of axial free play between drums, spacers, and the ARROW-PAK heads will be quantified and the significance of that free play on normal and accident conditions will be discussed. Given the response to RAI 1-1, it will become clear that the maximum possible axial offset of a drum from being centered in an ARROW-PAK is approximately 3.5 inches, which will have a negligible affect on package response.* [28]

**NOTE**: The applicant presented information on the total axial free play, ≈ 7.5 in, between the ARROW-PAK dished head, spacers and 55-gallon drum.[31] The applicant stated that in a side orientation, the ends of the 55 gallon drum will always land on the cylindrical side wall of the ARROW-PAK, inboard of its dished heads and fusion welds. The applicant also stated that for 30-ft side drop, the spacer has little role other than to initially position the drum within the ARROW-PAK, and that the closest proximity of a drum end to the centerline of a fusion joint is 3.5 in. for a 10.5 in. spacer.

**Team Evaluation**: The applicant's response implies that there is a maximum axial gap of 7.5 in. between a spacer and the inside surface of the hemispherical head of the ARROW-PAK container. This gap may not have a negligible effect on the dynamic response of the container during a 30-ft end drop. Also, the 18-in inside diameter spacers and the 55-gallon drum may be off-center in the radial direction inside an ARROW-PAK container with an inner diameter of 26.5 in. The geometry of the spacer and its deformation and movement during transport and handling and HAC may affect hydrogen deflagration inside ARROW-PAK. (See team evaluation of applicant's response plan for RAI 3-1.)

**RAI 1-3**

*Revise Drawing No. 163-007 to provide Codes for design and Inspection of the ARROW-PAK container, and provide the calculations referenced in the response to RAI 1-3, dated February 17, 2006, for the localized stresses in the ARROW-PAK container. The response to RAI 1-3, dated February 17, 2006, is not complete because the referenced drawing submitted with the responses does not reflect the stated revision to delineate the codes for design and inspection of the ARROW-PAK container. Also, the staff needs to review the calculations for localized stresses performed to demonstrate compliance with the ASME Section VIII, Division 1, requirements. The contention that "the localized stresses in the saddle seal penetration are substantially reduced by the visco-elastic nature of the HDPE material..." is questionable for higher strain rates. Interpret the local stress in light of the strain-rate sensitivity of the HDPE material in order to better understand the importance of high-strain-rate conditions.*

*Response to RAI 1-3 indicates that the properties of the fused joint are at least as good as the parent pipe material itself. However, the fused joint area's fracture toughness is not discussed, and impact test values are not provided. The fused joint impact properties should be compared to those of the parent pipe material in order to provide the technical bases for the assumption. The requested information is required to evaluate the efficacy of the fusion process and the resulting properties under high-strain-rate conditions in compliance with 10 CFR 71.31 and 71.33 requirements.* [27]

**Applicant's Response**: *The drawing will be revised to include applicable design and inspection codes. Non Destructive Examination (NDE) inspection techniques capable of detecting the largest allowable flaw in the fusion joint will be identified and added to the drawing as/if appropriate (see response to RAI 2-1 below). Previously referenced calculations will be provided. With reference to the various full-scale free drop and deflagration tests now planned, the discussion of localized stresses at higher strain rates will be expanded. The properties of the fused joint compared to the parent material will be discussed as requested.* [28]

**NOTE**: The applicant presented no information on the applicable design and inspection codes for the ARROW-PAK container. [31] The applicant stated that localized stresses are of no consequence under both static and dynamic load conditions. The applicant stated that the fused joint fracture toughness is discussed in the response plan for RAI 2.1.

**Team Evaluation**: The applicant has not provided the applicable design and inspection codes for the ARROW-PAK container. Calculations of the localized stresses in the ARROW-PAK container have not been provided.

**RAI 2-1**

*Provide data to demonstrate that the EHMW-HDPE material has sufficient fracture toughness to preclude brittle fracture at all ranges of temperatures required by 10 CFR 71. Specify the size of the largest flaws in the EHMW-HDPE material including any that may be present in weldments (base material and material near the fused zone). Include data on fracture toughness measurements as a function of temperature of this material. Include your understanding of the highest local stress-intensity factors that you used to compute the likelihood of propagation of flaws.*

*This RAI is similar to the RAI 2-2 issued July 8, 2005, because the response is not acceptable. In the response, the applicant proposes to impose an administrative control limiting the temperatures down to 32ºF during shipment. The issue needs to be addressed using a design approach instead of administrative approach when issuing a CoC for unlimited use.*

*SAR Section 2.6.2 indicates that the HDPE will resist crack propagation under high strain-rate conditions. Justify that this material will not undergo rapid crack propagation, under high impact loads. Provide the previously requested data of $K_c$ measurements as a function of temperature at the strain rate of the standard precracked instrumented Charpy test. This can be provided using results of instrumented tests of Charpy specimens (machine notched followed by precracking or razor sharpening) or other high strain-rate tests that furnish appropriate fracture toughness values. For the fracture toughness number that is quoted in this section, it appears that there is little resistance to indicate that there is too little time to allow for flaw propagation. This argument seems incongruous. Data for the expected range of strain rates and temperatures of service (expressed in K units) are required to permit computation of allowable flaw sizes and allowable stresses.*

*In the response to the first round RAI 2-9, the applicant states that "there is no standardized test of "ultra-high" velocity tensile-testing of polymers." This is not what is sought for consideration. Impact test values, such as those suggested above, with appropriate interpretation would address the concern regarding the HDPE adequate toughness for this application. This information is required to verify compliance of the ARROW-PAK container with 10 CFR 71.71 and 71.73 requirements.* [27]

**Applicant's Response**: *In consideration of this RAI, WTS now expects to change from TR480 to an alternate engineering grade of HDPE, which exhibits improved low-temperature performance. Fracture toughness data for the full range of temperatures will be presented for the final material selected. In addition, full scale deflagration testing at cold (-40°F) temperature will be conducted to demonstrate the ability of ARROW-PAK to adequately withstand a deflagration at regulatory defined, normal condition of transport cold temperatures. If the HDPE material grade selected for final design does not clearly exhibit a ductile-to-brittle transition temperature below -40°F, the deflagration testing will be performed with worst-case detectable flaws induced in the ARROW-PAK.* [28]

**NOTE**: The applicant eliminated administrative control on temperature during shipment and replaced the EHMW-HDPE (PE 3408) with PE 4710, an alternate grade of HDPE that exhibits improved low-temperature performance. The applicant presented information on the fracture toughness ($K_{Ic}$) of PE 4710. [31] The applicant mentioned that the allowable flaw sizes corresponding to the -40°F $K_{Ic}$ values and worst-case cold deflagration pressures are greater than 1.0 in. for based and fused material. The applicant stated that this size limit is readily satisfied via standard practice, process controls and visual inspection applicable to fabrication and fusion welding of the HDPE pipe, and post fusion weld NDE is not considered necessary. The applicant also mentioned that a final confirmation of cold temperature performance capability, a -40°F deflagration test will be performed using an ARROW-PAK, which has first undergone cold (-20°F) 30-ft free drop, with stoichiometric mixture of hydrogen and air and an downward adjusted internal pressure of 15.6 psig at -40°F (based on 30 psig at 140°F).

**Team Evaluation**: The applicant needs to provide the basis and data that support the statements regarding the allowable flaw sizes for base and fused material, and the post-weld NDE. This is a recurring issue and NRC concern, i.e., whether the properties of the fused joint are at least as good as the parent pipe material itself, mentioned in RAI 1-3. With regard to the low-temperature deflagration test, the basis for the downward pressure adjustment, i.e., 30 psig at 140°F does not correspond to the MNOP as requested by NRC in RAI 3-1.

**RAI 2-2**

*Provide the basis for testing the ARROW-PAK containers with ambient internal pressure and temperature (73°F and 93°F) instead of the MNOP of 100 psig and the temperatures most unfavorable between -20°F and 100°F. This RAI is the same as RAI 2-4 issued July 8, 2005. The February 17, 2006, response to the RAI 2-4 is not complete because the rationale provided in SAR section 2.7.1.2 and response to RAI 2-4 is not supported with adequate technical bases. Specifically, the rationale that the ARROW-PAK would experience only compressive stresses due to free drops is not reasonable and not supported by analyses. Also, the assumption that the conservatism in the test set-up counteracts sufficiently the adverse effects of temperatures on the material properties must be supported by analyses or tests.*

*This information is required to verify compliance of the ARROW-PAK container with 10 CFR 71.73 (b) requirements.*

**Applicant's Response**: *Full-scale HAC free drop testing will be reperformed in light of this RAI. Considering material properties at temperature extremes and the effects of internal pressure and drop orientation on free drop response, WTS will identify what it considers to be a set of worst-case free drop tests. Dependent on the final response to RAI 2-1, cold temperature (-20°F) free drop tests utilizing ARROW-PAK containers with induced flaws will be considered. The final set of recommended tests will be presented and the basis for initial conditions will be discussed in detail at the next meeting with the NRC.*

**NOTE**: The applicant presented information on the plan for additional set of free drop tests (one side and one end) at cold (-20°F) conditions, with concrete and/or steel filled drum, prototypical spacers inside 3 test ARROW-PAKs each pressurized to MNOP of 69.4 psig at -20°F. The applicant also provided additional details on a test sequence that will maximize cumulative damage of the test unit, and its subsequent use for the -40°F deflagration testing. [31]

**Team Evaluation**: Although not mentioned specifically by the applicant, the ARROW-PAK test units for the free drop tests are presumably made of the new material, i.e., PE 4710, an alternate grade of HDPE that exhibits improved low-temperature performance. The MNOP of 69.4 psig at -20°F, however, is considerably lower than the MNOP of 100 psig requested by NRC in RAI 2-2.

**RAI 2-3**

*Provide the basis for the assumption that the horizontal and vertical drop tests performed to meet 10 CFR 71.73(c)(1) HAC Free Drop requirements represent the orientations for which maximum damage is expected. This RAI is the same as RAI 2-6 issued July 8, 2005. The February 17, 2006, response to the RAI 2-6 is not complete because the rationale provided is not supported with adequate technical bases. The 30-foot drop tests are performed for two orientations of the test assemblies, one horizontal, and the other vertical. The basis for selecting these two orientations as the most damaging to the ARROW-PAK container is not provided. This information is required to verify compliance with 10 CFR 71.73(c) (1).* [27]

**Applicant's Response**: *The basis for the drop test orientation(s) will be expanded to provide improved justification for which orientations will result in maximum expected damage. WTS continues to believe for ARROW-PAKs contained within a TRUPACT-II that flat end and flat side drops are the governing cases. We intend to provide a more thorough explanation of this and are prepared to perform drop tests in other orientations if NRC concerns cannot be analytically addressed.* [28]

**NOTE**: The applicant presented information and discussed the drop orientations and the shift of ARROW-PAKs during the drop tests. [31] The applicant included a drawing with a title "Worst case alignment of ARROW-PAK within TRUPACT-II ICV."

**Team Evaluation**: This is a recurring issue and NRC concern, and the RAI is the same as that issued during the first round of NRC review. It is not clear that the applicant's response plan provided at the February 7 meeting constitutes an adequate technical basis and is acceptable to NRC. There is no discussion of the stretch band that holds the three ARROW-PAK containers together inside the TRUPACT-II ICV. The behavior of the stretch band during impact would be different for different drop orientations, hence, potentially affecting the behavior of the individual ARROW-PAK container during the impact.

**RAI 3-1**

*Demonstrate the integrity of ARROW-PAK container by full scale test using hydrogen deflagration at MNOP conditions and with its high-density polyethylene walls at the maximum temperature estimated in Section 3.5 of the SAR. In addition, provide Reference 16 [i.e., K. L. Kosanke and B. J. Kosanke, Repeat Firing of 10.2 cm (4 in.), SDR-17, HDPE Mortars, Proceedings of the First International Fireworks Symposium (1992)]. Provided the nature of this request (i.e., exemption), the applicant needs to demonstrate convincingly that the ARROW-PAK container can prevent any damage to the cask containment system from deflagrations. This information is required to verify that the package is safe and that there is adequate technical basis to grant an exemption from the requirements of 10 CFR 71.43(d).* [27]

**Applicant's Response**: *Full-scale deflagration tests will be conducted at stoichiometric conditions with the ARROW-PAK at the maximum normal operating pressure and wall temperature expected during the thermal event described in Section 3.5 of the SAR as requested. Reference 16 will be provided as requested.* [28]

**NOTE**: *The applicant presented information in multiple slides on the planned deflagration test at 160°F* [31]*. The applicant stated that 170°F max drum temperature for CTU-2 is not representative of an average temperature. The applicant proposed hot deflagration test to be conducted at stoichiometric conditions, 160°F ARROW-PAK wall temperature, and 30 psig internal pressure.*

**Team Evaluation**: The temperature (160°F) and pressure (30 psig) in the applicant's proposed hot deflagration test are lower than the temperature (170°F) and the MNOP (100 psig) requested by NRC. Although not mentioned specifically by the applicant, the ARROW-PAK test unit for the hot deflagration test is presumably made of the new material, i.e., PE 4710, an alternate grade of HDPE that exhibits improved low- and high-temperature performance.

The applicant's response plan to RAI 3-1 addressed the initial temperature, pressure, and gas composition for the hot deflagration test of ARROW-PAK, albeit at conditions different from those requested by NRC. Heretofore, no discussion has been given on the geometry/obstacles inside the ARROW-PAK that could affect deflagration, and more importantly, deflagration-to-detonation transition (DDT) which can generate a huge pressure pulse and may breach the container. The technical basis for testing ARROW-PAK with 55-gallon drum and corrugated plastic spacers inside, at an elevated temperature and the MNOP conditions, will be presented in the team's independent assessment, Section 2.4.3 of this report.

**Summaries of February 7, 2007, Meeting**

The team reviewed the summaries of the February 7, 2007, meeting by NRC, BOH Environmental, and WTS. The NRC summary in the Weekly Information Report – Week Ending February 9, 2007 [33] mentioned only the deflagration tests on a full scale ARROW-PAK container and that WTS intends to submit the responses to the RAIs sometime in October 2007.

The BOH summary [29] of the meeting listed the major decisions that remain to be made on the temperature and pressure of the deflagration test and the worst case orientation of the drop test. The summary mentioned four additional tests, a schedule for conducting the tests, reports, and revision of the exemption request (i.e., the SAR Addendum) [6], and submission of the revised exemption request to NRC in October 2007. The four tests are:

- Perform the high-speed impact tests on the HDPE material at -40°F. This will determine the maximum allowable flaw size (gouges).
- Perform the drop tests at -20°F.
- Perform a hydrogen / air deflagration test at -40°F.

- Perform a hydrogen/air deflagration test at 160 or 170°F.

During the site visit on July 12, 2007, the BOH staff indicated that they can perform the four tests in eight months at a cost of $200,000.

The WTS summary of the meeting [30] enumerated and discussed six key RAI issues on (1) the corrugated spacers, (2) design and inspection codes applicable to ARROW-PAK, (3) localized stress under high strain rate, (4) cold temperature behavior of fused joints, (5) drop test initial conditions, and (6) deflagration temperature and pressure. The summary listed seven NRC concerns to be addressed, as well as other concerns including scope, schedule, budget, quality assurance (QA), resources, and benefit. The WTS summary is considerably less optimistic than the BOH summary, as most of the NRC concerns are non-trivial.

## External Technical Review of ARROW-PAK Container

Table 1 provides a chronology of interaction with the NRC on ARROW-PAK.

| Table 1. Chronology Interactions with NRC on ARROW-PAK | |
|---|---|
| 11/06/2002 | Washington TRU Solutions, LLC (Phil Gregory and Robert Johnson) and BOH Environmental, LLC (Harvey Svetlik and Trent Hannah) presentation to Nuclear Regulatory Commission. Subject: Proposed use of ARROW-PAK container for shipment of TRU waste. |
| 01/31/2005 | Washington TRU Solutions, LLC (P. C. Gregory) letter to Nuclear Regulatory Commission (M. Rahimi, Office of Nuclear Materials Safety and Safeguards). Subject: Application for revision of the TRUPACT-II Certificate of Compliance, NRC Docket No. 719279. [Note: Submittal of TRUPACT-II SAR Addendum for ARROW-PAK.] |
| 05/25/2005 | Washington TRU Solutions, LLC (P. C. Gregory, et al.) meeting with Nuclear Regulatory Commission (M. Rahimi, et al.). Purpose: To discuss responses to the NRC staff first round Request for Additional Information on an exemption request by Washington TU Solutions for transporting ARROW-PAK containers in TRUPACT-II packages. |
| 07/08/2005 | Nuclear Regulatory Commission (Meraj Rahimi, Office of Nuclear Materials Safety and Safeguards) letter to Washington TRU Solutions, LLC (P. C. Gregory). Subject: Request for additional information on ARROW-PAK exemption request. |
| 08/22/2005 | Washington TRU Solutions, LLC (P. C. Gregory) letter to Nuclear Regulatory Commission (Meraj Rahimi, Office of Nuclear Materials Safety and Safeguards). Subject: Reference – Docket No. 719218 and TAC No. L23811. |
| 09/21/2005 | Washington TRU Solutions, LLC (P. C. Gregory, et al.) meeting with Nuclear Regulatory Commission (M. Rahimi, et al.). Purpose: To discuss responses to the NRC staff Request for Additional Information on an exemption request by Washington TRU Solutions for transporting ARROW-PAK containers in TRUPACT-II packages. |
| 10/22/2005 | Washington TRU Solutions, LLC (P. C. Gregory) letter to Nuclear Regulatory Commission (Meraj Rahimi, Office of Nuclear Materials Safety and Safeguards). Subject: Reference – Docket No. 719218 and TAC No. L23811. |
| 12/15/2005 | Washington TRU Solutions, LLC (P. C. Gregory) letter to Nuclear Regulatory Commission (Meraj Rahimi, Office of Nuclear Materials Safety and Safeguards) Subject: Reference – Docket No. 719218 and TAC No. L23811. |
| 01/12/2006 | Washington TRU Solutions, LLC (P. C. Gregory) letter to Nuclear Regulatory Commission (Meraj Rahimi, Office of Nuclear Materials Safety and Safeguards). Subject: Reference – Docket No. 719218 and TAC No. L23811. |

| Table 1. Chronology Interactions with NRC on ARROW-PAK | |
|---|---|
| 02/17/2006 | Washington TRU Solutions, LLC (P. C. Gregory) letter to Nuclear Regulatory Commission (M. Rahimi, Office of Nuclear Materials Safety and Safeguards). Subject: response to NRC request for additional information on ARROW-PAK exemption request (Docket No. 719218, TAC No. L23811). [Note: Submittal of ARROW-PAK SAR Addendum for ARROW-PAK.] |
| 07/14/2006 | Nuclear Regulatory Commission (Meraj Rahimi, Office of Nuclear Materials Safety and Safeguards) letter to Washington TRU Solutions, LLC (P. C. Gregory). Subject: Second request for additional information on ARROW-PAK exemption request. |
| 10/17/2006 | Washington TRU Solutions, LLC (P. C. Gregory) letter to Nuclear Regulatory Commission (M. Rahimi, Office of Nuclear Materials Safety and Safeguards). Subject: Second request for additional information on ARROW-PAK exemption request (Docket No. 719218, TAC No. L23811). |
| 02/07/2007 | Washington TRU Solutions, LLC (P. C. Gregory, et al.) meeting with Nuclear Regulatory Commission (M. Rahimi, et al.). Purpose: To discuss responses to the NRC staff second round Request for Additional Information on an exemption request by Washington TRU Solutions for transporting ARROW-PAK containers in TRUPACT- II. |
| 04/30/2007 | Nuclear Regulatory Commission (Paul T. Dickman) e-mail to Bennett Johnson. Correspondence regarding ARROW- PAK certification assuming successful testing and complete responses to Request for Additional Information. |

## 2.4 INDEPENDENT ASSESSMENT

The technical review team has conducted an independent assessment that examines the key functional requirements of the ARROW-PAK container for overall compliance with federal regulations, material properties, deflagration testing, and the technical limitations of ARROW-PAK as payload containers of high-wattage TRU waste. The independent assessment is strictly technical, without programmatic consideration of resources, or future needs of ARROW-PAK. The latter needs are being addressed separately in this report.

### 2.4.1 Functional Requirements for Overall Compliance

The TRUPACT–II SAR Addendum for ARROW-PAK [(6)] describes TRUPACT-II as a Type B package carrying three ARROW-PAK containers loaded with high-wattage TRU waste. The high-wattage TRU waste can generate hydrogen gas concentration >5%, which could result in deflagration/detonation in an air environment. The function of the ARROW-PAK is to prevent any detonation from occurring, and to contain any deflagration that might occur from hydrogen gas >5 % (by volume).

The ARROW-PAK payload container is fabricated of EHMW-HDPE material meeting ASTM D3350-04. [(23)] Currently there is no NRC guidance on fabrication or use of non-metal containments for Type B radioactive material packaging for transportation. Although the ARROW-PAK has been used to transport Type A quantities of MLLW permitted under the DOT regulations, a Type A packaging only needs to be a strong container with no observable leakage of contents.

In the SAR Addendum [(6)], the ARROW-PAK is identified as a payload container (i.e., contents in TRUPACT-II) not as a containment system. Therefore, the applicant must demonstrate, per 10 CFR 71.31, [(10)] that the failure of ARROW-PAK will not reduce the effectiveness of the TRUPACT-II containment system. However, the applicant has not evaluated the consequences of a failure of ARROW-PAK inside the TRUPACT-II. The applicant assumes that ARROW-PAK will not fail, and, therefore, there will be no consequence of failure. Although not explicitedly stated, the key requirement of the ARROW-PAK is to function as a containment system to contain deflagration and to prevent failure of the TRUPACT-II containment system. The team has concluded that ARROW-PAK provides a system for containing the deflagration gases, and should be defined as a secondary containment system. A secondary containment system offers the advantage of defense in depth, which should increase the assurance of the containment boundary integrity of the primary containment system of TRUPACT-II, especially since ARROW-PAK appears to be relatively robust based on the testing data. Rather than claiming that ARROW-PAK will not fail under any circumstances during transportation, a slightly modified alternative approach would be to demonstrate that ARROW-PAK has a very low probability of failure during transportation, and that even if it fails, the consequence will be minimal because the pressure (due to volume dilution) will be too low to challenge the primary containment boundary of TRUPACT-II.

The codes and standards listed in the SAR Addendum [6] do not meet the intent of 10 CFR 71.31 [10] for nuclear applications. The listed ASTM Standards for the ARROW-PAK are primarily for non-nuclear applications. As a containment system and according to the NRC guidance documents listed in Section 2.1 of this report, the applicant needs to use the codes and standards similar to those listed in NUREG/CR-1815 [19], NUREG/CR-3019 [20] and NUREG/CR-3854 [21], but for EHMW-HDPE.

As identified in the NRC RAIs, the test and analysis performed in the SAR Addendum [6] for NCT and HAC should include, as initial conditions, the extreme temperature conditions depicted in 10 CFR 71.71 [13] and 71.73.[14] Also, the NRC Regulatory Guide (RG) 7.6 [16] and 7.8 [17] should be used, to the extent possible, to demonstrate compliance to the 10 CFR 71 [8] requirements.

The applicant has requested an exemption from 10 CFR 71.43(d).[5] An exemption requires the applicant to demonstrate that (1) the health and safety of the worker and public will not be endangered, or (2) equivalent safety is provided. The apparent exemption request is to allow the hydrogen concentration to exceed 5%, which is prohibited by NRC in NUREG-1609 [9] based on the NRC Information Notice No. 84-72. [22] The SAR Addendum [6] has not demonstrated equivalent safety where the ARROW-PAK is identified as a payload container. The applicant's request to use administrative controls to address extreme temperature conditions for unlimited, non-emergency shipments is not reasonable. This request has been denied by NRC.

During the site visits to WIPP [34] and BOH [29], the team asked the applicant the following hypothetical question: "If one has to start the exemption application all over again, which materials of construction for the high-wattage TRU- waste payload container, HDPE or stainless steel (SS), would be more likely to obtain NRC approval?" The answers were the same: 304 SS. This is also the choice of the technical review team for reasons as follows: The material properties of 304 SS are well known over the temperature range of interest (-40°F to 140°F); it is an ASME Code material with well-established rules for the design, fabrication (including welding), examination, and use as containments in the radioactive materials packagings, hence its familiarity and general acceptance by the NRC staff.

304 SS is also the material of construction for the 3013 cans that contain plutonium metal or oxide with a similar concern of hydrogen gas generation. To reduce the source of hydrogen gas generation, the plutonium oxide must be treated, i.e., stabilized, at high temperature to reduce the moisture content to less than 0.5% before it is placed inside a 3013 can, which has a welded closure. The 3013 can is then placed inside a nested primary and secondary containment vessels (PCV/SCV) and a Celotex insulated, 35-gallon stainless steel drum known as the Model 9975 packaging, which has been certified by EM as a Type B transportation packaging. Thousands of Model 9975 packagings have been shipped to the Savannah River Site (SRS), without incident, during the successful closure of Rocky Flats in the early 2000s. Another shipping campaign of Model 9975 packagings from Richland to the SRS is about to begin.

### 2.4.2 Material Properties

It is apparent from the NRC review that the applicant has not provided sufficient data on the material properties of the EHMW-HDPE in the SAR Addendum [6] to allow a full assessment of the ARROW-PAK container. Material properties data include yield stress, tensile strength, stress-strain curves, Charpy V-notch energy, fracture toughness, resistance to crack growth as a function of strain rate and temperature (in the range of -40 to 140ºF) for both the parent material, i.e., EHMW-HDPE (PE 3408), and the fused joint. Since the shipping time for the "high-wattage" contents in ARROW-PAK/TRUPACT-II could be up to 70 days, creep/relaxation behavior of EHMW-HDPE may be relevant.

The team has learned during the site visit on July 12, 2007, that Grade PE 4710, instead of Grade PE 3408, will be used for the ARROW-PAK container. This information was presented to NRC by the applicant at the February 7, 2007 meeting at NRC, and the team was provided with the applicant's presentation shortly after the July 12 site visit. It is claimed that PE 4710 has higher pressure capacity and better high and low temperature performance than PE 3408. The team has reviewed the information on PE 4710 provided by the applicant. The results of the Charpy impact test on PE 4710 showed a DBTT below -30ºF; whereas, the DBTT in the presence of machined or razor notches for PE 3408 is ≈ 0ºC (32°F). The fracture surfaces of the specimen tested at -50ºF showed some level of ductility at that temperature. [35] Thus, the results show that PE 4710 has significantly improved performance over PE 3408 at low temperature. The applicant needs to perform similar Charpy impact tests on the fused joints of PE 4710 at comparable low temperatures.

The applicant also provided data on the tensile yield strength of PE 4710 (or DGDA-2490) at temperatures ranging from -40ºF to 140ºF. [36] However, the applicant has not provided data on the ultimate tensile strength. The applicant should provide similar data for the fused joints. These data are needed to determine the margin of safety for the ARROW-PAK container subjecting to primary membrane and bending loads. The applicant should provide stress-strain data for PE 4710 at various temperatures of interest; the applicant should also provide material properties data for PE 4710 and its fused joint, as a function of strain rates and temperatures.

The team has concluded that the same set of material properties data mentioned above for PE 3408, and requested by NRC, must be provided for PE 4710 (parent and fused joint) in order to allow for full assessment of the ARROW-PAK container.

The team has made the following additional observations related to the material properties of ARROW-PAK that depend on quality assurance, fabrication and inspection:

Relatively speaking, the weakest point in the ARROW-PAK container has to be located at or near the butt and/or saddle fused joints. These joints may contain flaws and voids, and the applicant needs to describe the quality assurance program to ensure adequate inspection of the fused joints. The applicant should discuss the inspection techniques for detecting flaws and voids in the fused joints. The discussion should include limitations of these techniques, and the smallest flaw size that can be detected by the techniques. This flaw size should be smaller than the critical flaw size determined using the fracture toughness tests. The allowable flaw size should be larger than the smallest detectable flaw, but smaller than the critical flaw size by an adequate safety margin.

### 2.4.3 Deflagration Testing

The team has reviewed the literatures on deflagration, i.e., subsonic combustion, and DDT, with a focus on the physics principles and experimental data, and their implications on a confined system such as ARROW-PAK with a 55-gallon drum and corrugated spacers inside. The shock wave associated with a detonation has a fish scale-like, cellular structure, with a cell width $\lambda$ that decreases with the reactivity of the fuel/air mixture. [37] Thus at a given initial system temperature and pressure, the minimum cell width, $\lambda_{min}$, is found at the stoichiometric composition of the mixture. For $H_2$/air mixtures, the stoichiometric composition is 29 vol % $H_2$ in air, and at 25°C and 1 atmosphere, $\lambda_{min}$ is ≈ 15 mm. [38] One may associate decreasing $\lambda$ with increasing reactivity, and thereby qualitatively with increasing flame acceleration and the likelihood for DDT.

Since $\lambda$ is determined by reactivity and chemical reaction kinetics, it is not surprising that the detonation cell width is sensitive to fuel/air composition, initial system temperature and pressure. The minimum value of $\lambda$ (≈ 15 mm at 1 atm and 25°C) may be further reduced by increasing the initial pressure above 1 atm [39], and the initial temperature above 25°C. [42] So far only one deflagration test has been conducted using an empty ARROW-PAK at ambient temperature, and near stoichiometric composition, with an initial pressure of 18.6 psia, which is well below the MNOP of 100 psig (114.7 psia). Deflagration testing at 100 psig and the maximum normal operating temperature (MNOT) (140°F for EHMW-HDPE) at the stoichiometric composition of $H_2$/air would provide a substantially smaller $\lambda$, and, therefore, significantly increase the likelihood of flame acceleration and DDT. This is the technical basis for deflagration testing at the MNOP and MNOT for the ARROW-PAK container, as requested by NRC in RAI 3-1.

For the occurrence of deflagration and DDT in a confined volume, two geometrical parameters, the axial length (L) and the diameter, or width (d) of the cross-sectional flow area are related to $\lambda$ as

$$d > \eta \lambda$$

where $\eta$ depends on the cross-sectional flow geometry, e.g., $\eta = 1/3$ for a circular tube geometry; and $\eta = 1$ for a square channel geometry [43]. Since the detonation cell width ($\lambda$) may be only a few mm at the MNOP of 100 psig, there are many possible configurations inside the ARROW-PAK with a 55-gallon drum and corrugated spacers that would satisfy $d > \eta \lambda$. In fact, since the 55-gallon drum has protruded circumferential ledges and the spacers have corrugated recesses, all kinds of flow areas with characteristic widths $> \lambda$ can be created when the drum and spacers move off center in the radial direction during handling, transport, or hypothetical accidents. Furthermore, these internal configurations have open, interconnected pathways with different aspect ratios (L/d), abrupt changes, turning corners, etc.

The effect of changing flow geometry is to increase the turbulence in the gas flow, and it is well known that turbulence enhances flame acceleration and DDT. The L/d ratio is often mentioned in the literatures on DDT. Experimental data are cited that below a certain threshold value of L/d, DDT will not occur because a run-up distance is required for flame acceleration into a supersonic regime. [44] The threshold value of L/d necessary for DDT is said to depend on the initial system pressure, $L/d \approx 10$ for a pressure of 66 psig, versus $L/d \approx 60$ if the system is not pressurized. [45] This threshold value of L/d can be even smaller, e.g., 3, for highly reactive and unstable fuels such as acetylene and ethylene. It is widely recognized that such L/d ratios and thresholds are highly system-dependent, and one should be very careful in applying them to other situations. For example, the applicant has indicated that the L/d for an empty ARROW-PAK is 2.4, which is well below the L/d threshold value of 10, hence rendering DDT impossible. One can also argue that since the MNOP is 100 psig, the critical L/d ratio for the ARROW-PAK should be $< 10$, and some of the many pathways inside the ARROW-PAK with a 55-gallon drum and corrugated spacers could have L/d values greatly above the threshold value.

The physics basis of the run-up distance, $L_c$, may be defined as the distance between the point of ignition and the point at which the flame front has reached a speed slightly below $\approx 95\%$ of the isobaric sonic velocity in the combustion product. [40] In many cases $L_c \approx L_{DDT}$, which is the run-up distance to detonation. [40] It has been shown that when the flame front reaches $L_c$ (the fast deflagration regime), substantial overpressure in the confined system may have already been generated. [47] Compared to the geometrical length L of the pathways in the system, the shorter the $L_c$, the easier it is for fast deflagration and DDT. $L_c$ is determined by the acceleration of the flame front, which is greatly affected by obstructions in the flow path, and the enhanced burning due to localized turbulence. [48]

Literature data indicate that abrupt change in flow pathways by turning corners, or changing cross sectional areas may significantly reduce the run-up distances, thereby increasing the likelihood of fast deflagration and DDT. In many cases, detonation occurs immediately past the corners with ignition points located (≈ 66 cm) upstream from the 90 degree corner. [49] For pathways that transit from a narrow to a larger cross-sectional area, the run-up distance is reduced by a factor ≈ 8 to 20, compared to that of a straight tube with a constant flow area. [49] Pathways with corners and changing flow geometries are abundant inside the ARROW-PAK with a 55-gallon drum and corrugated spacers.

The technical team has reviewed more literatures on deflagration and DDT than those included in this report. Suffice it to say that based on the physics principles and demonstrated in many experiments, the effect of geometry and obstacles on flame acceleration and DDT must be considered in the deflagration testing of ARROW-PAK. Specifically, the deflagration testing should be conducted using a full-size ARROW-PAK made of the new polyethylene material (PE 4710) with a 55-gallon drum and corrugated spacers inside. The test should be conducted at the MNOP of 100 psig and 170°F wall temperature at the stoichiometric composition of $H_2$ in air. (Note: NRC would like to see the deflagration test of ARROW-PAK conducted at 170°F wall temperature, rather than 140°F, according to the summaries of the February 7, 2007, meeting.) [29]

The team notes that the NRC RAI 1-1 and RAI 1-2 requested information on the function and capacity of the corrugated spacers to "roughly" center the 55-gallon drum within the ARROW-PAK during handling, transport, and hypothetical accidents. The underlying issues of these RAIs related to deflagration testing are the internal configuration, which affects deflagration and DDT inside an ARROW-PAK during NCT and HAC. It is highly likely that more than one deflagration test of ARROW-PAK may be required to establish the bounding configuration for deflagration and DDT.

### 2.4.4 Technical Limitations

Low-temperature limit for EHMW-HDPE — The brittleness temperature for the EHMW-HDPE material is listed as -75°C (-103°F) in the TRUPACT-II SAR Addendum [6] (Material Safety Data Sheet, [MSDS] #240370, Marlex HHM TR-480X high density polyethylene, Chevron Phillips Chemical Company, Dec. 2005, www.cpchem.com/tds). In the absence of machined or razor notches, the brittleness temperature for EHMW-HDPE corresponding to no specimen failure is below -40°C (-40°F) and in the presence of machined or razor notches, the transition from ductile to brittle behavior occurs at less than 0°C (32°F), according to Ref. 20 given on p. 2-10 in the SAR Addendum. [6] The applicant requested administrative control that allows ARROW-PAK shipment only at temperatures above 0°C at any locations along the transportation route. The request was denied by NRC.

High-temperature limit for EHMW-HDPE — The temperature has a significant effect on the mechanical properties of EHMW-HDPE. The hydrostatic design basis for EHMW-HDPE, according to the above MSDS is 1,600 psi at 23°C (73°F) and 800 psi at 60°C (140°F). The stress life of EHMW-HDPE, shown in Figure 2.5 on p. 2-9 of the SAR Addendum [6] (Driscopipe Engineering Characteristics, Bulletin 1159-88-A17, Phillips Driscopipe Inc., now Chevron Phillips Chemical Company), contains three sets of limits on the hoop stress versus time at 73.4, 120, and 140°F (23, 48.9, and 60°C). For the maximum shipping period of 70 days for ARROW-PAK, the hoop stress limits at 73.4, 120, and 140°F are 1,800, 1,200, and 1,000 psi, respectively, and the corresponding design stress limits, shown also on Fig. 2.5, are 800, 500, and 400 psi, respectively.

The SAR Addendum [6] (p. 2-3) states that the allowable stress is conservatively assumed to be 2/3 of the yield strength, or 1,000 psi at 140°F, which is consistent with the ASME Section III requirement for primary membrane stress ($P_m$). However, the ASME Section III also requires that the allowable stress should be less than 1/3 of the tensile strength. If the yield strength is greater than half of the tensile strength, 1/3 of the tensile strength would be a limiting criterion for the allowable stress. It is not clear whether the allowable stress discussed in Section 2.3.1 of the SAR Addendum [6] satisfies the 1/3 tensile strength criterion.

All engineering materials have inherent limitations in technical applications, which could be temperature, pressure, irradiation, corrosive environment, etc. Certain limitations, however, may be imposed by system constraints, for example, the "high-wattage" TRU waste for the ARROW-PAK container. The SAR Addendum [6] (p. 10-14) lists the payload limits of 6.2 and 6.6 watts for each ARROW-PAK, which has been used to determine the inventory of TRU waste suitable for shipment. [50] The thermal analysis of the SAR Addendum [6] (p. 3-9) showed that the allowable decay heat loading for ARROW-PAK is determined based on an average ARROW-PAK sidewall temperature of 140°F. Increasing the allowable temperature limit (from 140°F) by using the new bi-modal resin polyethylene (PE 4710) will thus extend the allowable decay heat loading, i.e., high-wattage limit, for ARROW-PAK, and, therefore, the TRU waste inventory that could be shipped in ARROW-PAK. For example, the team notes that Table 3-1 of the SAR Addendum [6] (p. 3-9) shows 155°F as the maximum ARROW-PAK sidewall temperature for a decay heat load of 40 watts, which is also the decay heat limit of TRUPACT-II. A high-wattage limit of 40 watts could be set for a single ARROW-PAK (made of PE 4710), or 13.3 watts for each of the three ARROW-PAK containers, and shipped in the TRUPACT-II packaging.

Structural Response

The independent assessment in Section 2.4.3 deflagration testing focused on the conditions (i.e., gas composition, pressure, temperature, flow geometry and obstacles) that are most conducive to deflagration and DDT in an $H_2$/air mixture. The structural response of the ARROW-PAK to a deflagration, and/or DDT inside the container must be evaluated in order to determine if ARROW-PAK can satisfy its key functional requirement as a secondary containment system with a very low probability of failure during transportation.

It is important to recognize that the structural response of a containment vessel to a dynamic pressure loading is very different from that of a static pressure load. The Special Working Group, High Pressure Vessels (SWG/HPV) of the ASME Section VIII, Division 3 has been charged to develop a Code Case for impulsively loaded pressure vessels since December 2002. The impulsive load considered in the current Code Case is based on detonation by high explosives inside a pressure vessel containment structure. The SWG/HPV plans to include $H_2$/air deflagration and DDT in its chartered task in 2008. In a background document on pressure vessels subject to impulsive loads, the SWG/HPV made several key observations:

- Containment vessel peak response to dynamic loading is dependent upon the specific impulse of the pressure pulse (i.e., the area under the pressure-time history) rather than upon the peak pressure magnitude.

- Details of the pressure-time history, other than specific impulse, are of little importance to peak vessel responses.

- The peak containment vessel response typically occurs well beyond the time of application of the dominant portion of the dynamic pressure pulse, i.e., the pressure loading is over well before peak response is achieved.

- Because of the presence of higher modes of response of the vessel, the highest vessel response peak often occurs well beyond the first peak of response.

The background document also described the fundamental principles involved in the dynamic response of a spherical shell subjected to a spatially uniform internal pressure pulse (I), which for simplicity, was taken to be a rectangular pressure pulse ($p_o$) in time ($\Delta t$), i.e.,

$$I = p_o \Delta t \qquad (1)$$

Solving the equation of motion for the fundamental mode of a thin spherical shell of a density ($\rho$) and thickness (h) gives the radial displacement (w) of the shell as a function of time (t) as

$$w = I / (\rho h \beta) \sin \beta t, \qquad (2)$$

where $\beta$ is related to the period of response of the shell ($\tau$) as

$$\tau = 2\pi / \beta, \qquad (3)$$

and

$$\beta^2 = 2E / [\rho a^2 (1 - \nu)], \qquad (4)$$

where E, a, and $\nu$ are, respectively, the Young's modulus, radius, and Poisson's ratio of the spherical shell.

The in-plane biaxial strain in the shell ($\varepsilon$) is

$$\varepsilon = w / a, \qquad (5)$$

and the in-plane biaxial membrane stress ($\sigma$) is

$$\sigma = E\varepsilon / (1 - \nu). \qquad (6)$$

Equation (2) is a sinusoidal function that reaches the maximum at $\sin \beta t = 1$, and

$$w_{max} = I / (\rho h \beta), \qquad (7)$$

which is proportional to I, and inversely proportional to $\rho$, h, and $\beta$. Equation (1) shows I to be proportional to the peak pressure ($p_o$) and the duration of the impulse ($\Delta t$) that are characteristic of the detonation and depend on the nature of the explosives. The density $\rho$ of the HDPE (0.95-0.97 g/cc) is small compared to that of steels [The Young's modulus and Poisson's ratio of HDPE are (0.55-1.0) GN/m2 and 0.45, respectively, versus (190-210) GN/m2 and 0.3 of steels] (7.6-8.1 g/cc); the value of $\beta$ for the HDPE is ≈20% of that of steels, whereas the wall thickness of the HDPE used for the ARROW-PAK, 1.765 in. (4.5 cm), may be thicker than that of steels, if steels were used for ARROW-PAK. (Note: This discussion ignores the fact that ARROW-PAK is a cylinder, not a sphere. The difference between them, however, can be accounted for approximately by a geometrical multiplier.)

Equation (3) shows that the period of response ($\tau$) of the shell to the pressure pulse is inversely proportional to $\beta$, hence,

$$\tau_{HDPE} = 5\ \tau_{steels} \qquad (8)$$

other things being equal. This is an interesting observation in that a structure made of HDPE is fundamentally a lower frequency structure than a structure made of steels. One implication would be a more efficient damping of the dynamic response of a HDPE structure, and a reduced likelihood of elastic strain growth, reverberations from higher mode dynamic responses, etc.

It should also be noted that the strain capacity of HDPE is ≈ 800%, and the deformation and fracture behavior of a long-chained, polymeric HDPE material is fundamentally different from that of steels. The dynamic structural response of ARROW-PAK (made of HDPE) to deflagration and detonation in the elastic and plastic regimes is a topic worthy of further study.

## 2.5 SUMMARY AND CONCLUSION

An external technical review of the ARROW-PAK container has been conducted to evaluate its potential for certification exemption as additional payload containers in the TRUPACT-II packaging by the NRC. The technical review team reviewed the design basis of the ARROW-PAK container against the regulatory requirements, the NRC review of the exemption application, and the applicant's response plan to NRC's RAI. The team also conducted an independent assessment of the functional requirements of the ARROW-PAK container for overall compliance with federal regulations, material properties, deflagration testing, and technical limitations of ARROW-PAK as payload containers of high-wattage TRU waste in TRUPACT-II.

The major conclusion of the external technical review of the ARROW-PAK container is that the current DOE plan to address the NRC RAIs in the exemption application for ARROW-PAK does not offer assurance for NRC approval. The performance of the new, bi-modal polyethylene ARROW-PAK must be demonstrated, by tests or analysis, to meet all regulatory requirements. DOE may consider a risk-informed and performance-based alternate approach for the exemption application. This alternate approach would treat ARROW-PAK as a secondary containment system and demonstrate that it has a very low probability of failure during transportation, and that even if it fails, the consequence would be minimal because the pressure (due to volume dilution) will be too low to challenge the primary containment boundary of TRUPACT-II.

The team observed that among the seven RAIs generated from the second round of the NRC review, three (RAI 2-1, RAI 2-2, and RAI 2-3) are the same (or similar) to the RAIs that were generated from the first round of the NRC review; one, RAI 1-3, was a partial repeat of another first-round RAI because the applicant's response to that original RAI was judged incomplete by the NRC. In terms of the categories of observations defined in this report, the failure to address NRC concerns in repeated RAIs is tantamount to a key Technical Issue, i.e., an observation requiring resolution to ensure the ARROW-PAK will successfully meet mission needs. It is also an Opportunity for Improvement, i.e., an observation that would improve the ability to meet mission needs, if the applicant would communicate with NRC and make certain that its response plans to the RAIs are acceptable to NRC before their implementation.

This Page Intentionally Left Blank

# 3.0 OTHER REGULATORY AND MANAGEMENT APPROVALS

Because the ARROW-PAK would be disposed of in a permitted facility, the NRC is not the only governing body that would need to approve its use. Other stakeholders include the EPA, NMED, and DOE Headquarters/CBFO. Each regulatory body and the potential approvals needed are briefly discussed below.

## 3.1 ENVIRONMENTAL PROTECTION AGENCY

The federal radioactive waste disposal regulations for TRU waste and the compliance evaluation criteria specifically established for the disposal of TRU waste in the WIPP facility govern the radioactive components of mixed TRU waste. The EPA is the regulatory agency responsible for certifying WIPP's compliance with the TRU waste disposal regulations. As a result, EPA could require DOE to request a Change Notice to the CoC before EPA could approve the ARROW-PAK for disposal in WIPP.

The average density (i.e., kilograms per cubic meter) of cellulosic, plastic, and rubber disposed of in WIPP are tracked and reported to the EPA [51] because of the potential for gas generation resulting from microbial consumption of these materials. A primary gas expected to be generated from microbial consumption is carbon dioxide which could facilitate radionuclide releases associated with future inadvertent human intrusion (e.g., drilling) into the repository.

## 3.2 NEW MEXICO ENVIRONMENT DEPARTMENT

RCRA is the environmental regulation governing the storage, treatment and disposal of chemically hazardous waste. NMED is the authority that regulates the hazardous constituents of mixed TRU waste disposed of at WIPP. In October 1999, NMED issued a Hazardous Waste Facility Permit to DOE for the management, storage, and disposal of mixed CH-TRU waste at WIPP. NMED prohibits the disposal of sealed containers. The ARROW-PAK is a sealed container which could arrive at the WIPP with >5% by volume hydrogen. As a result, NMED would require DOE to request a permit modification before NMED could approve the ARROW-PAK for disposal in WIPP. Alternatively, the WIPP would need to vent and filter the ARROW-PAK after arrival at the WIPP.

## 3.3 DOE HEADQUARTERS/CARLSBAD FIELD OFFICE

DOE-HQ and CBFO would need to incorporate any necessary changes required by the regulators, as well as any operational or procedural changes (such as modifications to the Documented Safety Analysis) before CBFO could authorize generator sites to utilize the ARROW-PAK as an approved payload container.

## 3.4 DEPARTMENT OF TRANSPORTATION

DOT regulates the transportation of hazardous and radioactive materials. No additional DOT approvals would be required if the NRC certifies the ARROW-PAK as a payload container for the TRUPACT-II or HalfPACT shipping containers.

**Team Evaluation**: The team estimated that it would require 12 to 24 months to obtain these additional approvals.

Furthermore, CBFO may need to update its estimates of the average density of plastics disposed in the repository if the ARROW-PAK is disposed in WIPP. It was outside the scope of this review to evaluate to what degree the HDPE composition of the ARROW-PAK might have on long-term repository performance. However, CBFO would need to evaluate whether the amount of magnesium oxide planned for emplacement on top of the waste stacks will be sufficient to react with the incremental increase of carbon dioxide that might be generated based on the additional available plastic disposed of in WIPP.

# 4.0 TRU WASTE INVENTORY REVIEW AND ASSESSMENT

Understanding and managing the TRU waste inventory across the DOE complex is a challenge. TRU inventory volumes will vary as characterization is completed and site knowledge matures. This section briefly reviews the total TRU inventory, current high-wattage waste inventory, and high-wattage waste mitigation strategies.

## 4.1 TOTAL TRU WASTE INVENTORY

Typically, the TRU inventory data has been collected to support a regulatory driver such an environmental impact statement or most recently, EPA compliance with the radioactive waste disposal standards. The CH- and RH-TRU inventory submitted in 2004 Compliance Recertification Application to the EPA represents the latest published inventory data. Tables 2 and 3 give the CH and RH inventories by site as of 2004.

Table 2. WIPP CH-TRU waste anticipated inventory, by site

| TRU Waste Site | Stored Volumes ($m^3$) | Projected Volumes ($m^3$) | Anticipated Volumes ($m^3$) |
|---|---|---|---|
| Argonne National Laboratory - East | $1.1 \times 10^2$ | $7.9 \times 10^1$ | $1.9 \times 10^2$ |
| Argonne National Laboratory - West | $6.0 \times 10^0$ | $3.8 \times 10^1$ | $4.4 \times 10^1$ |
| Battelle Columbus Laboratories | $5.2 \times 10^0$ | $0.0 \times 10^0$ | $5.2 \times 10^0$ |
| Bettis Atomic Power Laboratory | $1.9 \times 10^1$ | $0.0 \times 10^0$ | $1.9 \times 10^1$ |
| Energy Technology Engineering Center | $2.3 \times 10^0$ | $0.0 \times 10^0$ | $2.3 \times 10^0$ |
| Hanford (Richland-RL) | $1.3 \times 10^4$ | $1.3 \times 10^4$ | $2.5 \times 10^4$ |
| Hanford (River Protection-RP) | $3.9 \times 10^3$ | $0.0 \times 10^0$ | $3.9 \times 10^3$ |
| Idaho National Engineering & Environmental Laboratory | $6.1 \times 10^4$ | $1.2 \times 10^2$ | $6.1 \times 10^4$ |
| Knolls Atomic Power Laboratory - Nuclear Fuel Services | $5.5 \times 10^1$ | $1.7 \times 10^2$ | $2.3 \times 10^2$ |
| Lawrence Livermore National Laboratory | $3.5 \times 10^2$ | $2.1 \times 10^3$ | $2.4 \times 10^3$ |
| Los Alamos National Laboratory | $1.2 \times 10^4$ | $3.3 \times 10^3$ | $1.5 \times 10^4$ |
| Nevada Test Site | $6.2 \times 10^2$ | $4.6 \times 10^2$ | $1.1 \times 10^3$ |
| Oak Ridge National Laboratory | $0.0 \times 10^0$ | $4.5 \times 10^2$ | $4.5 \times 10^2$ |
| Paducah Gaseous Diffusion Plant | $5.7 \times 10^0$ | $5.7 \times 10^0$ | $1.1 \times 10^1$ |
| Rocky Flats Environmental Technology Site | $5.4 \times 10^3$ | $2.7 \times 10^3$ | $8.1 \times 10^3$ |
| Sandia National Laboratories - Albuquerque | $2.4 \times 10^1$ | $0.0 \times 10^0$ | $2.4 \times 10^1$ |
| Savannah River Site (SRS) | $1.3 \times 10^4$ | $2.4 \times 10^3$ | $1.5 \times 10^4$ |
| U.S. Army Material Command | $2.5 \times 10^0$ | $0.0 \times 10^0$ | $2.5 \times 10^0$ |
| University of Missouri Research Reactor | $1.5 \times 10^0$ | $0.0 \times 10^0$ | $1.5 \times 10^0$ |
| Totals | $1.1 \times 10^5$ | $2.5 \times 10^4$ | $1.3 \times 10^5$ |
| Emplaced Volume | | | |
| Waste Isolation Pilot Plant | $7.7 \times 10^3$ | $0.0 \times 10^0$ | $7.7 \times 10^3$ |
| Grand Totals | $1.2 \times 10^5$ | $2.5 \times 10^4$ | $1.4 \times 10^5$ |

Table 3. WIPP RH-TRU waste anticipated inventory by site

| TRU Waste Site | Stored Volumes ($m^3$) | Projected Volumes ($m^3$) | Anticipated Volumes ($m^3$) |
|---|---|---|---|
| Argonne National Laboratory – East | $1.5 \times 10^1$ | $1.0 \times 10^2$ | $1.2 \times 10^2$ |
| Argonne National Laboratory - West | $2.4 \times 10^1$ | $6.9 \times 10^1$ | $9.3 \times 10^1$ |
| Battelle Columbus Laboratories | $4.4 \times 10^1$ | $1.8 \times 10^0$ | $4.6 \times 10^1$ |
| Bettis Atomic Power Laboratory | $2.0 \times 10^0$ | $0.0 \times 10^0$ | $2.0 \times 10^0$ |
| Energy Technology Engineering Center | $5.0 \times 10^0$ | $0.0 \times 10^0$ | $5.0 \times 10^0$ |
| Hanford (Richland-RL) | $3.8 \times 10^2$ | $9.4 \times 10^3$ | $9.8 \times 10^3$ |
| Hanford (River Protection-RP) | $4.5 \times 10^3$ | $0.0 \times 10^0$ | $4.5 \times 10^3$ |
| Idaho National Engineering & Environmental Laboratory | $2.2 \times 10^2$ | $0.0 \times 10^0$ | $2.2 \times 10^2$ |
| Knolls Atomic Power Laboratory - Schenectady | $0.0 \times 10^0$ | $1.4 \times 10^2$ | $1.4 \times 10^2$ |
| Los Alamos National Laboratory | $1.2 \times 10^2$ | $0.0 \times 10^0$ | $1.2 \times 10^2$ |
| Oak Ridge National Laboratory | $0.0 \times 10^0$ | $6.6 \times 10^2$ | $6.6 \times 10^2$ |
| Sandia National Laboratories - Albuquerque | $4.6 \times 10^0$ | $0.0 \times 10^0$ | $4.6 \times 10^0$ |
| Savannah River Site | $0.0 \times 10^0$ | $2.3 \times 10^1$ | $2.3 \times 10^1$ |
| Totals | $5.3 \times 10^3$ | $1.0 \times 10^4$ | $1.6 \times 10^4$ |

Every five years, the DOE is required to submit an updated Compliance Recertification Application to the EPA, which will include an updated TRU inventory. However, starting in 2008, CBFO will have an annual data call to update the TRU inventory.

## 4.2 CH-TRU HIGH-WATTAGE WASTE

The first published inventory estimate of high-wattage waste was given January 2001, in a report titled; CH-TRU Waste Inventory Shippability Analysis: Waste Requiring Path Forward After Approval of Revision 19 of the TRUPACT-II SAR Revision 1. (52) In this report, the shippable and non-shippable inventory based on wattage was documented. Five sites were identified with both shippable and non-shippable high-wattage waste inventory. These sites include Hanford, Los Alamos National Laboratory (LANL), Mound, ORNL and SRS. The shippable and non-shippable inventory for each site, at the time of this report, is given in Table 4. It is important to note that the values given in Table 4 were inventory projections based on the expected benefit of TRUPACT-II SAR (Rev.19, 2001). (52)

Table 4. Shippable and Non-Shippable $^{238}$Pu Inventory Based on Wattage Limits After Approval TRUPACT-II-SAR Revision 19, 2001.

| Site | TRUPACT-II SAR Revision 19 | | |
|---|---|---|---|
| | Shippable As Is (Wattage <3×)[a] ($m^3$) | Shippable Through Measurement/Testing (3×<Wattage<10×)[a] ($m^3$) | Non-Shippable (Wattage>10×)[a] ($m^3$) |
| Hanford | 41 | 2 | 3 |
| LANL | 209 | 60 | 113 |
| Mound | 224 | 6 | 10 |
| ORNL | 211 | 2 | 9 |
| SRS | 2,718 | 227 | 1,168 |
| **TOTAL** | **3,402** | **297** | **1,303** |

[a]Note: "3×" and "10×" represent 3 and 10 times the currently assigned decay heat limit (SNL NM, 1999) (53)

The December 21, 2001, National TRU Waste Optimization Plan, LA-CP-01-509 (54) discussed the shippable TRU inventory and identified optimization alternatives to increase the shippable inventory. Multiple optimization initiatives were undertaken to address high-wattage waste. The primary initiatives undertaken are discussed in the following Section 4.3.

**Team Evaluation**: In 2001, high-wattage waste accounted for only 2.98 % of the total TRU waste inventory destined for WIPP (shippability report CH-TRU Waste Inventory Shippability Analysis: Waste Requiring Path Forward After Approval of Revision 19 of the TRUPACT-II SAR Revision 1). (52) It is located at five of the 19 total number of sites with TRU waste. The current status of non-shippable CH-TRU waste is not known. There has been no published CH-TRU waste inventory analysis dealing with high-wattage or other challenging waste since 2001. Surveying and publishing the non-shippable inventory could focus DOE efforts on complex wide challenges.

## 4.3 WIPP SHIPPING INITIATIVES FOR HIGH-WATTAGE WASTE

A two-fold approach was pursued to develop a shipping path for high-wattage CH-TRU wastes: Regulatory and Technology Development. Regulatory approvals were accomplished by refinement in gas generation models and amendments to the contact-handled Safety Analysis Report for Packaging (CH-SARP). Regulatory approvals by refinement proved to be extremely successful. Section 4.3.1 addresses the SAR revisions and the resulting change in the shippable inventory. Relative to technology development, the use of a hydrogen getter system in tandem with the development of an inner bag breaching technology was investigated as well as the ARROW-PAK. These efforts have proven to be technically challenging and difficult to obtain approval for use by all of the stakeholders. To date, they have not been implemented.

### 4.3.1 Regulatory Approvals (Certificate of Compliance Revisions)

The U.S. Nuclear Regulatory Commission approval of the revisions to the TRUPACT-II SAR [6] and the CH-TRAMPAC significantly reduced the cubic-meters of high-wattage CH-TRU waste requiring use of the ARROW-PAK. The chronology for submittal of the SAR revisions and the reduction in the inventory available for shipment using the ARROW-PAK are shown in Figure 6.

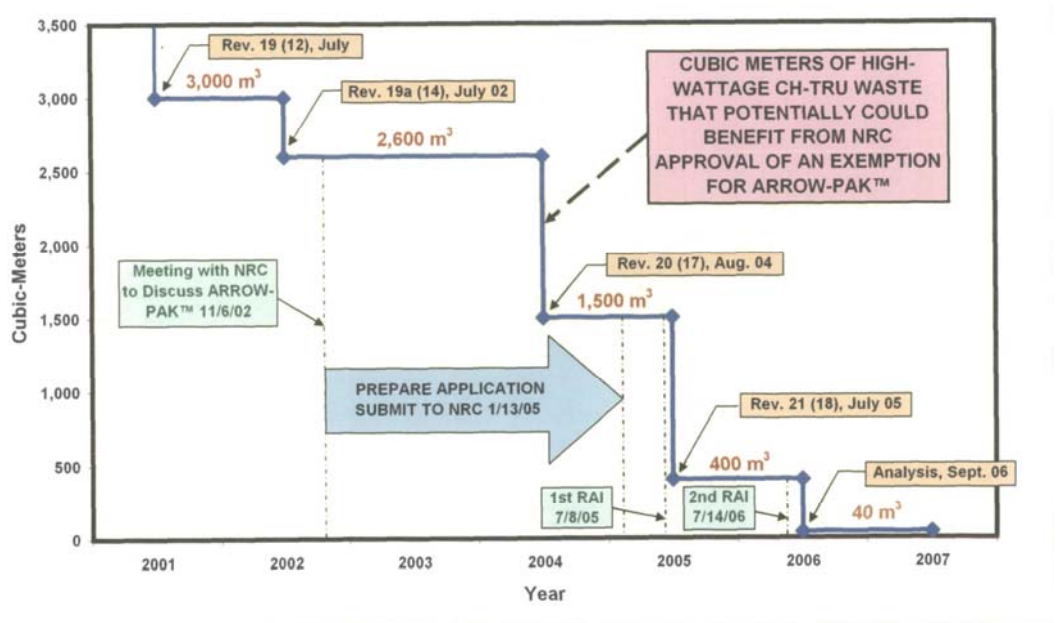


Figure 6. Impact of TRUPACT-II SAR CoC revisions on ARROW-PAK

These revisions allowed payload expansion, which afforded DOE sites several options for compliant shipment of CH-TRU waste in the TRUPACT-II to WIPP. The analysis of inventory reduction resulting from each of the SAR revision was performed by CBFO. All U.S. DOE sites shipping CH-TRU waste to WIPP were required to implement these revisions into their characterization and waste transportation programs per an implementation schedule.

SAR Revision 19 (Certificate of Compliance Revision 12) July 27, 2001

The U.S. Nuclear Regulatory Commission on July 27, 2001 approved Revision 19, CoC 9218 Revision 12, of the TRUPACT-II SAR. [52] Key initiatives in Revision 19 that increased the volume of CH-TRU waste that could be shipped in the TRUPACT-II without the need for an ARROW-PAK included:

- Revised pressure calculations
- Additional method for determining aspiration times
- Revised decay heat limits for standard waste box overpacks
- Use of dose-dependent G values based on matrix depletion
- Implementation of the Flammability Assessment Methodology
- Use of packaging-specific drum age criteria and prediction factors
- Headspace sampling to qualify teat category waste containers for shipment
- Mixing of shipping categories
- Addition of specifications for higher diffusivity filters.

The quantity of CH-TRU waste that could be shipped in the TRUPACT-II after approval of this revision due to hydrogen gas generation limits had decreased to approximately 2% of the inventory or approximately 3,000 $m^3$. This is the amount of CH-TRU waste in 2001 that could have possibly been shipped to WIPP using the ARROW-PAK.

SAR Revision 19a (Certificate of Compliance Revision 14) July 5, 2002

The U.S. Nuclear Regulatory Commission on July 5, 2002, approved Revision 19a, CoC 9218, Revision 14, of the TRUPACT-II SAR. [6] Key initiatives in Revision 19a that increased the volume of CH-TRU waste that could be shipped in the TRUPACT-II included:

- New content codes for approximately 2,000 drums of high-wattage waste at the LANL
- Shorter shipping period of 5 days from LANL to WIPP for approximately 2,000 drums of high-wattage waste
- Strict administrative controls to ensure the TRUPACT-II inner containment vessel is vented within 5-days of closure
- Evacuation of the inner containment vessel and backfill with inert gas

- Transient analysis of hydrogen concentration instead of the usual steady-state analysis.

The end result of this revision was to reduce the amount of high-wattage waste that would require shipment in the ARROW-PAK by approximately 400 $m^3$, leaving a balance of approximately 2,600 $m^3$ of CH-TRU waste that could possibly be shipped to WIPP using the ARROW-PAK.

SAR Revision 20 (Certificate of Compliance Revision 17) August 23, 2004

The U.S. Nuclear Regulatory Commission on August 23, 2004, approved Revision 20, CoC 9218 Revision 17, of the TRUPACT-II SAR. [(6)] Key initiatives in Revision 20 that increased the volume of CH-TRU waste that could be shipped in the TRUPACT-II included:

- Revised pressure analysis
- Maximum shipping period of 20 days for close proximity shipments (i.e., within a 1,000 mile radius of WIPP)
- Maximum shipping period of 10 days for shipments completed under strict administrate controls to ensure the TRUPACT-II inner containment vessel is vented within the authorized shipping period.

Based on interviews conducted by CBFO with each DOE generator site, these initiatives further reduced the amount of CH-TRU high-wattage waste that could not be shipped in the TRUPACT-II by approximately 1,100 $m^3$, resulting in a balance of approximately 1,500 $m^3$of CH-TRU waste that could possibly be shipped to WIPP using the ARROW-PAK.

SAR Revision 21 (Certificate of Compliance Revision 18) July 19, 2005

The U.S. Nuclear Regulatory Commission on July 19, 2005, approved Revision 21, CoC 9218, Revision 18, of the TRUPACT-II SAR [(6)]. The revision to the application increased allowable wattage significantly from Revision 19a. This revision extended the initiatives in Revision 19a that applied specifically to LANL to all the DOE generator sites. Based on re-analysis of generator site inventory data and additional interviews conducted by CBFO with the sites, the quantity of CH-TRU waste that could not be shipped in the TRUPACT-II due to hydrogen gas generation limits was further reduced to approximately 400 $m^3$.

Analysis, Sept. 06

CBFO revised the CH-TRU waste inventory estimates in September 21, 2006, and determined that approximately 40 $m^3$ (200 drums) of CH-TRU waste was now available that could possibly be shipped to WIPP using the ARROW-PAK. [(50)] This waste, resides at SRS.

**Team Evaluation**: Significant strides have been made in addressing high-wattage waste. Each SAR revision resulted in an increase in the shippable inventory and a decrease in the volume of waste requiring an ARROW-PAK. Each of the SAR revisions has resulted in viable alternatives to the ARROW-PAK. These revisions have improved the shippability of TRU waste in a TRUPACT-II and reduced the number of drums which would have required use of the ARROW-PAK.

The team agrees with the estimates of high-wattage waste. About 200 ARROW-PAKs would be needed for 40 $m^3$ of high-wattage waste, costing about $3,000,000 at $15,000 each.

## 4.4 CURRENT HIGH-WATTAGE WASTE ASSESSMENT

When use of the ARROW-PAK was first envisioned the amount of high-wattage TRU waste was estimated to be approximately 3,000 $m^3$. It is now believed that the inventory that could benefit from the ARROW-PAK is limited to about 40 $m^3$. [55] High-wattage waste inventory estimates are given below.

### 4.4.1 Savannah River Site

The SRS has detailed wattage information available. The inventory of drums and distribution of wattage is given in Figure 7. [55]

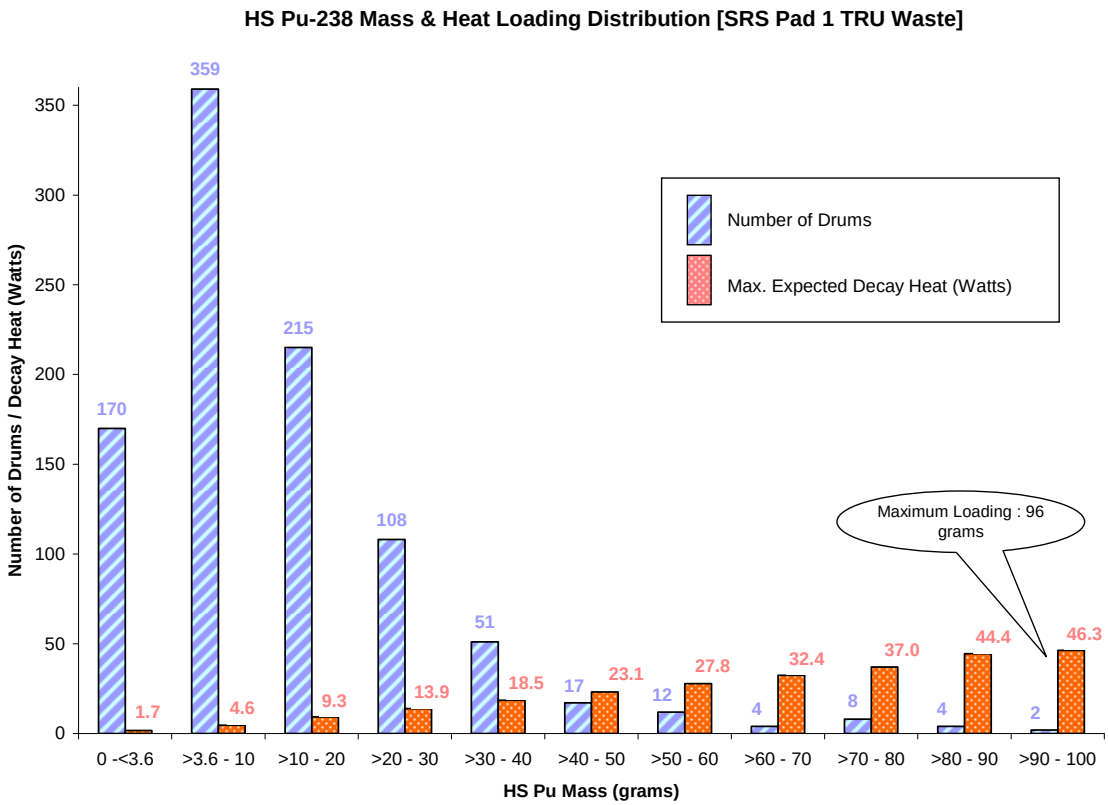


Figure 7. $^{238}$Pu mass and heat loading distribution (SRS Pad 1 TRU waste).

An estimated 200 containers could possibly benefit from an approved ARROW-PAK. This is the 40 $m^3$ identified in 4.3.1. There is however, additional high-wattage waste as SRS that could not be shipped in an ARROW-PAK. The ARROW-PAK decay heat limit submitted by the CBFO is 6.6 watts. Approximately 570 SRS drums (120 $m^3$) exceed 6.6 watts cannot be shipped in the current design of the ARROW-PAK.

**Team Evaluation**: The current ARROW-PAK design does not address all high-wattage waste. However, an additional 120 $m^3$ of high-wattage waste could be shipped in a redesigned ARROW-PAK made of the alternate polyethylene material. This brings the total high-wattage waste available for use by the TRU waste ARROW-PAK to about 160 $m^3$. About 800 ARROW-PAKs would be needed for 160 $m^3$ of high-wattage waste, costing about $12,000,000 at $15,000 each.

### 4.4.2 Los Alamos National Laboratory

The LANL has 325 drums containing high activity waste that exceeds the plutonium equivalent curies limit in the CH-TRAMPAC. Of these, 235 of the highest risk, high-activity drums, are to be disposed by January 2008.

**Team Evaluation**: At this time LANL does not require the ARROW-PAK to address its high-wattage waste.

### 4.4.3 Other Sites

At the Idaho National Laboratory (INL) there is not a significant population of high-wattage waste. No recently published high-wattage waste information is available from Hanford, Mound, or ORNL.

**Team Evaluation**: It is believed that the unshippable inventory identified in Table 4 still applies for Hanford, Mound and ORNL.

This Page Intentionally Left Blank

# 5.0 POTENTIAL OTHER ARROW-PAK USES

Several potential uses for the ARROW-PAK are discussed below.

## 5.1 HIGH-FLAMMABLE VOLATILE ORGANIC COMPOUNDS (VOCS)

Multiple sites have containers that exceed the calculated mixture lower explosive limit as determined by calculations performed by the methods defined in the CH-TRAMPAC (this is performed for sites that use the WIPP Waste Information System). At SRS, approximately 45 containers have failed this evaluation. At the INL Advanced Mixed Waste Treatment Project (AMWTP), approximately 90 containers fail this evaluation, with a projected 134 additional containers as the current contract progresses.

**Team Evaluation**: Currently, these containers have no shipping path. It is unclear whether repackaging would address high flammable volatile organic compounds (VOCs) levels. Drums that fail for flammable VOCs could theoretically be shipped in an ARROW-PAK. A hydrogen-air mixture is bounding in terms of energy release from a deflagration. However, use of the ARROW-PAK is currently, only proposed for Waste Type III. This excludes use for Waste Types I, II, and IV. It is important to note that a VOC level which may impact the ability of HDPE to withstand a deflagration event is not defined, and should be determined if DOE pursues these other waste types for the ARROW-PAK.

## 5.2 MACROENCAPSULATION

As discussed, in Section 1.3 of this report, the 21 foot long version of the ARROW-PAK has been used as a macroencapsulation treatment technology for MLLW. The MLLW ARROW-PAK contains seven overpack drums that each contains four compacted 55-gallon drums, for a total of approximately 28 55-gallon drums per ARROW-PAK. It is an approved treatment and disposal method that has been approved for onsite treatment by the States of Colorado, Tennessee, Utah, and Washington, as well as the DOE and the EPA. MLLW has been successfully treated at ORNL, Hanford, and EnergySolutions (formerly known as Envirocare of Utah) meeting RCRA treatment and disposal criteria. The cost for disposing seven 55-gallon drums was reported as $14,000 by BOH Environmental during its meeting with the team on July 12, 2007. [(2)]

**Team Evaluation**: The MLLW ARROW-PAK can be used as a macroencapsulation treatment technology if there is a DOE need. DOE should prepare an assessment of the need for a MLLW ARROW-PAK container.

This Page Intentionally Left Blank

# 6.0 RESULTS AND RECOMMENDATIONS

***Summary Results and Recommendations***

The ARROW-PAK External Technical Review team was chartered to evaluate two primary areas:

(1) the technical aspects of the ARROW-PAK container and its potential for certification by the NRC, and

(2) the TRU waste inventory appropriate for use in the ARROW-PAK.

After an extensive review of safety analysis reports, designs, test data, RAIs from the NRC, responses to RAIs, TRU waste inventory estimates, and other technical information obtained by the team and provided by CBFO and BOH Environmental, the team has determined that:

(1) the ARROW-PAK container does not have a high probability of success of obtaining certification from the NRC using the current approach described in supporting documentation. To increase the probability of success for NRC approval, the applicant (WTS on behalf of DOE) must revise the TRUPACT-II Safety Analysis Report Addendum to include the alternate high-density polyethylene material in the ARROW-PAK design, revise the response to the NRC RAIs, and demonstrate through tests or analysis that the redesigned ARROW-PAK meets all regulatory requirements.

(2) the high-wattage TRU waste inventory available for use in the current design of the ARROW-PAK is about 40 $m^3$. If the ARROW-PAK is redesigned and remanufactured with the alternate polyethylene material, which has improved temperature performance over the existing material, the high-wattage TRU waste inventory available for use in the new ARROW-PAK is increased to about 160 $m^3$.

The current plan, as described in the applicant's response to the NRC's RAIs and the summaries of the last public meeting with NRC on February 7, 2007, does not offer assurance for NRC approval for several reasons that are summarized as follows:

- The NRC concerns are significant, and the current plan proposed by the applicant still has not addressed those concerns in several key areas, such as the applicable design and inspection codes, cold temperature behavior of fuse joints, drop test orientations, and deflagration testing pressure and temperature.

- An alternate high-density polyethylene material has been identified. However, much work remains in materials, design, fabrication, quality assurance, and testing to demonstrate the performance and compliance with regulatory requirements of this material.

To increase further the probability of success for NRC approval, the applicant should consider a slightly modified, alternate approach in the exemption application. This alternate approach would treat ARROW-PAK as a secondary containment system instead of a payload container, and demonstrate that it has a very low probability of failure during transportation, and that even if it fails, the consequence would be minimal because the pressure will be too low to challenge the primary containment boundary of TRUPACT-II.

The ARROW-PAK External Review Team made 31 observations. They were categorized as follows:

- **0 Findings** — Observations that would prevent ARROW-PAK from being certified or fully developed to meet mission needs. These observations should be considered fatal flaws and cannot be resolved.

- **15 Technical Issues** — Observations requiring resolution to ensure the ARROW-PAK will successfully meet mission needs.

- **6 Areas of Concern** — Observations that may require design modifications to the ARROW-PAK or additional testing to resolve the technical concern.

- **9 Opportunities for Improvement** — Observations that would improve the ability to meet mission needs or offer alternative solutions to technical problems.

- **1 Good Practice** — Items that are commendable and deserve recognition.

Specific results and recommendations are described below, and are grouped by observation category. The pertinent section of the report is noted in parenthesis.

### 6.1 ARROW-PAK Technical Review Results and Recommendations

**Technical Issues**

1. The applicant is planning to use an alternate polyethylene material, Grade PE 4710 instead of Grade PE 3408, for the ARROW-PAK container. The team has reviewed the information on PE 4710 provided by the applicant and found that PE 4710 has significantly improved performance over PE 3408 at low temperatures. However, the performance of this alternate material has not been demonstrated. (Section 2.4.2)

   *Recommendation: The applicant needs to demonstrate acceptable performance of the alternate polyethylene material.*

2. The ARROW-PAK is identified as a payload container, i.e., contents, in TRUPACT-II, not as a containment system. As such, the applicant must demonstrate that the failure of ARROW-PAK will not reduce the effectiveness of the TRUPACT-II containment system. The applicant has not evaluated the consequences of a failure of ARROW-PAK inside the TRUPACT-II. This is because the applicant assumes that ARROW-PAK will not fail, and, therefore, there will be no consequence of failure. (Section 2.4.1)

   *Recommendation: Instead of claiming that ARROW-PAK will not fail under any circumstances during transportation, a different approach would be to demonstrate that ARROW-PAK has a very low probability of failure during transportation, and that even if it fails, the consequence will be minimal because the pressure will be too low (due to volume dilution) to challenge the primary containment boundary of TRUPACT-II.*

3. Although not explicitedly stated in the supporting documentation, the key requirement of the ARROW-PAK is to function as a containment system to contain deflagration and to prevent failure of the TRUPACT-II containment system. The team has concluded that ARROW-PAK provides a system for containing the deflagration gases. A secondary containment system offers the advantage of defense in depth, which should increase the assurance of the containment boundary integrity of the primary containment system of TRUPACT-II. (Section 2.4.1)

   *Recommendation: The ARROW-PAK should be defined as a secondary containment system in all pertinent documentation and analyses.*

4. Compliance with all the 10 CFR 71 requirements needs to be demonstrated. (Section 2.4.1)

   *Recommendation: The tests and analyses performed for normal conditions of transport and hypothetical accident conditions should include, as initial conditions, the extreme temperature conditions depicted in 10 CFR 71.71 and 71.73. Also, the NRC Regulatory Guide (RG) 7.6 and 7.8 should be used, to the extent possible, to demonstrate compliance with 10 CFR 71 requirements.*

5. The applicant has requested an exemption from 10 CFR 71.43(d). The apparent exemption request is to allow the hydrogen concentration to exceed 5%, which is prohibited by NRC in NUREG-1609 based on the NRC Information Notice No. 84-72. The SAR Addendum has not demonstrated equivalent safety where the ARROW-PAK is identified as a payload container. (Section 2.4.1)

   *Recommendation: The applicant should revise the SAR Addendum to demonstrate equivalent safety while operating with hydrogen concentrations that exceed 5%.*

6. The codes and standards listed in the SAR Addendum do not meet the intent of 10 CFR 71.31 for nuclear applications. The listed ASTM Standards for the ARROW-PAK are primarily for non nuclear applications. (Section 2.4.1)

   *Recommendation: As a containment system and according to the NRC guidance documents, the applicant needs to use the codes and standards similar to those listed in NUREG/CR-1815, NUREG/CR-3019 and NUREG/CR-3854, but for EHMW-HDPE.*

7. It is apparent from the NRC review that the applicant has not provided sufficient data on the material properties of the EHMW-HDPE in the SAR Addendum to allow a full assessment of the ARROW-PAK container. (Section 2.4.2)

   *Recommendation: The applicant needs to provide sufficient material property data such as tensile strength, stress-strain curves, and fracture toughness data for the full range of temperatures for both the parent material and fused joint.*

8. The applicant needs to demonstrate the cold temperature performance of the alternate polyethylene material (PE 4710) by providing the basis and data that support allowable flaws for the base and fused material. (Section 2.3, RAI 2-1)

   *Recommendation: Conduct low-temperature fracture toughness tests for alternate polyethylene material and its fusion joint.*

9. The weakest point in the ARROW-PAK container is located at or near the butt and/or saddle fused joints. These joints may contain flaws and voids. (Section 2.4.2)

   *Recommendation: The applicant needs to describe the quality assurance program to ensure adequate inspection of the fused joints. The applicant should also discuss the inspection techniques for detecting flaws and voids in the fused joints, and perform impact tests on the fused joints of the PE 4710 at low temperatures.*

10. Only one deflagration test has been conducted using an empty ARROW-PAK. This was at ambient temperature and near stoichiometric composition, which is well below the maximum normal operating temperature and pressure. (Sections 2.4.3 and 2.3, RAI 3-1)

    *Recommendation: Deflagration testing at the maximum normal operating temperature and pressure is required.*

11. Air flow pathways and changing flow geometries are abundant inside the ARROW-PAK. Therefore, the effect of geometry and obstacles on flame acceleration must be considered in the deflagration testing of the ARROW-PAK. In addition, NRC is concerned that the 55-gallon drums within the ARROW-PAK will not remain roughly centered during handling and transport. Movement of the drum and spacer inside the ARROW-PAK creates complex flow geometry and enhances air turbulence, which in turn would affect potential deflagration. (Section 2.4.3)

    *Recommendation: Deflagration test(s) should be conducted using a full-size ARROW-PAK made of PE 4710 with a 55-gallon drum and corrugated spacers inside.*

12. The gap between the spacers and the inside surface of the hemispherical head of the ARROW-PAK container may not have a negligible effect on the potential hydrogen deflagration inside the container during a 30-ft end drop. (Section 2.3, RAI 1-2)

    *Recommendation: Demonstrate that this gap is acceptable through testing or analysis.*

13. The temperatures and pressures proposed for the additional free drop tests requested by NRC are considerably lower that the MNOP. (Section 2.3, RAI 2-2)

    *Recommendation: Conduct the additional free drop test(s) at the MNOP.*

14. The stretch bands that hold the three ARROW-PAKs together inside the TRUPACT-II react differently for different drop orientations. The applicant has not addressed this issue. (Section 2.3, RAI 2-3)

    *Recommendation: The stretch band issue should be addressed in the applicant's justification for selecting the free drop orientation that results in the maximum damage to the ARROW-PAK.*

15. The SAR Addendum states that the allowable stress is conservatively assumed to be 2/3 of the yield strength, or 1,000 psi at 140°F, which is consistent with the ASME Section III requirement for primary membrane stress. However, the ASME Section III also requires that the allowable stress should be less than 1/3 of the tensile strength. It is not clear whether the allowable stress discussed in Section 2.3.1 of the SAR Addendum satisfies the 1/3 tensile strength criterion. (Section 2.4.4)

    *Recommendation: The applicant should demonstrate that the allowable stress satisfies the ASME criteria for the yield and tensile strengths, whichever is lower.*

**Areas of Concern**

16. Among the seven RAIs generated from the second round of the NRC review, three (RAI 2-1, RAI 2-2, and RAI 2-3) are the same (or similar) to the RAIs that were generated from the first round of the NRC review; one (RAI 1-3) was a partial repeat of another first-round RAI because the applicant's response to that original RAI was judged incomplete by the NRC. The failure to address NRC concerns in repeated RAIs must be corrected. (Section 2.5)

    *Recommendation: The applicant should communicate closely with NRC and make certain that its response plans to the RAIs are acceptable to NRC before their implementation.*

17. The applicant continues to believe that the horizontal and vertical positions will result in the maximum damage to the ARROW-PAK during free drop tests. NRC has questioned this assumption and is an issue they have raised more than once. The applicant has stated they will conduct additional drop tests if the NRC concerns cannot be addressed analytically. (Section 2.3, RAI 2-3)

    *Recommendation: The applicant should communicate closely with NRC and make certain that its response plans to the RAIs are acceptable to NRC before their implementation.*

18. The ARROW-PAK payload container is fabricated of high-density polyethylene material. This is a thermoplastic material. Currently there is no NRC guidance on the fabrication or use of non-metal containments for Type B radioactive material packaging for transportation. (Section 2.4.1)

    *Recommendation: The applicant should communicate closely with NRC and make certain that its plans are acceptable to NRC before their implementation.*

19. The applicant has not provided the applicable design and inspection codes for the ARROW-PAK container. Calculations of the localized stresses in the ARROW-PAK container have not been provided. (Section 2.3, RAI 1-3)

    *Recommendation: Provide the appropriate codes and calculations.*

20. The applicant has not provided the type and material specification for the corrugated plastic spacers in the ARROW-PAK. (Section 2.3, RAI 1-1)

    *Recommendation: The applicant should revise Drawing No. 163-007 to include this information.*

**Opportunities for Improvement**

21. After the ARROW-PAK is redesigned and manufactured with the alternate polyethylene material (PE 4710), which has improved temperature performance than the existing material, the maximum wattage allowed for the TRU waste in one ARROW-PAK is increased to 40 watts from 6.6 watts as reported in the SAR Addendum. When three ARROW-PAKs are loaded into one TRUPACT-II, then the maximum allowable wattage would be 13.3 watts for each ARROW-PAK. It should be noted that the thermal limit of a TRUPACT-II is also 40 watts. (Section 2.4.4)

    *Recommendation: The SAR Addendum should be revised to indicate the higher thermal limits.*

## 6.2 TRU Inventory Review Results and Recommendations

**Opportunities for Improvement**

22. The high-wattage TRU waste inventory that could potentially be shipped in the current design of the ARROW-PAK has significantly decreased over time and is now estimated be about 40 $m^3$. An additional 120 $m^3$ of high-wattage waste could be shipped in a redesigned ARROW-PAK made of the alternate polyethylene material. This brings the total high-wattage waste available for use by the TRU waste ARROW-PAK to about 160 $m^3$. This waste is located primarily at SRS. Full characterization of this waste has not been completed. (Section 4.3.1 and 4.4.1)

    *Recommendation: Both the 40 $m^3$ and the 120 $m^3$ should be included in all future ARROW-PAK analyses and documentation. Characterization of this waste should be completed. Until characterization is complete these values should be considered estimates.*

23. About 200 ARROW-PAKs would be needed for 40 $m^3$ of high wattage waste. About 800 ARROW-PAKs would be needed for 160 $m^3$ of high-wattage wastes. At an estimated cost of $15,000 for each ARROW-PAK, this translates into a total cost of about $3,000,000 and $12,000,000, respectively. (Section 1.3)

    *Recommendation: DOE should develop a cost/benefit analysis for the ARROW-PAK.*

24. Official inventory estimates are currently only updated every five years to support the Compliance Recertification Application to the EPA. This update is focused on meeting the performance requirements of 40 CFR 194 [56] and not necessarily operational or technology needs. CBFO will begin annual updates in 2008. (Section 4.1)

    *Recommendation: The TRU waste inventory estimates should be updated annually. The latest TRU inventory data, which addresses both the shippable and nonshippable inventory, should be documented in official planning documents at a detail needed to facilitate operations and/or technology development.*

25. The most recent TRU waste planning document was the 2001 Shippability Report. This report has not been updated, and was prepared following the issuance of Revision 19 of the TRUPACT-II SAR in 2001 to address challenging waste that could not be shipped. The SAR has been revised several times since then, with the most recent being issued as Revision 21 in 2005. The National TRU Waste System Optimization Plan also contains inventory estimates and discusses plans for addressing TRU waste; this report was issued in 2001 and has not been updated. (Section 4.2)

    *Recommendation: Planning documents that include inventory estimates should be updated following the completion of the inventory update discussed above.*

**Good Practice**

26. As the TRU inventory available for shipment in a TRUPACT-II increased there was a concomitant decrease in the inventory available for use in the ARROW-PAK. This reduction is based on revisions to the TRUPACT-II SAR over the last five years. (Section 4.3.1)

    *Recommendation: Continue this good practice, as appropriate.*

### 6.3 Other Results and Recommendations

**Areas of Concern**

27. EPA, NMED, and DOE would need to provide additional approvals before the ARROW-PAK could be disposed of at WIPP. The team believes it would require 12 to 24 months to obtain these additional approvals. (Section 3.0)

    *Recommendation: Obtain the needed additional approvals if DOE decides to continue development of the TRU waste ARROW-PAK.*

**Opportunities for Improvement**

28. Approval from the DOT in addition to the NRC is not required to allow the ARROW-PAK to be used as a payload container for the TRUPACT-II. (Section 3.4)

    *Recommendation: Planning documents should include this information.*

29. The ARROW-PAK may also be an appropriate container for TRU waste with high flammable VOCs. (Section 5.1)

    *Recommendation: Evaluate the applicability of the ARROW-PAK for shipment of containers which fail for high flammable VOCs. Although the volume of waste is small, it does exist and will require addressing. Complex-wide alternatives for high flammable VOCs should be developed.*

30. The MLLW ARROW-PAK container has been approved as a treatment and disposal method by the States of Colorado, Tennessee, Utah, and Washington, as well as the DOE and the EPA. MLLW has been successfully treated at ORNL, Hanford, and EnergySolutions (formerly known as Envirocare of Utah). It can be used for this purpose if DOE has a need for it. (Section 5.2)

    *Recommendation: DOE should prepare an assessment of the need for the MLLW ARROW-PAK container for future MLLW disposal.*

31. Integrated Project Teams (IPT) can enhance assessments of inventory estimates, storage and transportation packages, and new technologies for WIPP.

    *Recommendation: CBFO should consider using IPTs in the future when evaluating inventory estimates, storage and transportation packages, and new technologies for WIPP. Team members should consist of federal personnel from Headquarters and the field (especially TRU generation and storage sites), national laboratories (especially those who are part of the Packaging Certification Program), and other independent experts from DOE facilities, academia, or private companies that could benefit the WIPP program.*

This Page Intentionally Left Blank

## 7.0 REFERENCES


(1) Contact-Handled Transuranic Waste Authorized Methods for Payload Control (CH-TRAMPAC). Washington, D.C., Office of Regulatory Procedures, U. S. Nuclear Regulatory Commission.

(2) Personal communication between Review Team and BOH in a July 12, 2007, meeting in New Orleans.

(3) S. Sue Countiss, et al., "Robust Solution to Difficult Hydrogen Issues when Shipping Transuranic Waste to the Waste Isolation Pilot Plant," presentation given at *WM'03 Conference*, Tucson, Arizona, February 23–27, 2003

(4) P. C. Gregory, WTS, to M. Rahimi, NRC, "Application for Revision of the TRUPACT-II Certificate of Compliance, NRC Docket No. 71-9218," January 31, 2005.

(5) 10 CFR 71.43, "General Standards for All Packages," *Code of Federal Regulations*, Office of the Federal Register, November 18, 2005.

(6) TRUPACT-II SAR Addendum for ARROW-PAK, Rev. 0, February 2006.

(7) 49 CFR 173, "Shippers–General Requirements for Shipments and Packagings," *Code of Federal Regulations*, Office of the Federal Register, May 3, 2007.

(8) 10 CFR 71, "Packaging and Transportation of Radioactive Material," *Code of Federal Regulations*, Office of the Federal Register, November 18, 2005.

(9) 49 CFR 173.24, "General Requirements for Packages and Packages," *Code of Federal Regulations,* Office of the Federal Register, May 3, 2007.

(10) 10 CFR 71.31, "Issuance of Licenses," *Code of Federal Regulations*, Office of the Federal Register, amended Apr. 30, 1992.

(11) 10 CFR 71.33, "Package Description," *Code of Federal Regulations,* Office of the Federal Register.

(12) 10 CFR 71.65, "Additional Requirement." *Code of Federal Regulations,* Office of the Federal Register.

(13) 10 CFR 71.71, "Normal Conditions of Transport," *Code of Federal Regulations*, Office of the Federal Register, 2006.

(14) 10 CFR 71.73, "Hypothetical Accident Conditions," *Code of Federal Regulations*, Office of the Federal Register, as amended at 69 FR 3795, Jan. 26, 2004.

(15) NUREG-1609, "Standard Review Plan for Transportation Packages for Radioactive Material," U.S. Nuclear Regulatory Commission, March 31, 1999.

(16) NRC Regulatory Guide 7.6, "Design Criteria for the Structural Analysis of Shipping Cask Containment Vessels," U.S. Nuclear Regulatory Commission, March 1978.

(17) 10 CFR 71.35, "Package Evaluation, *Code of Federal Regulations,* Office of the Federal Register.

(18) NRC Regulatory Guide 7.8, "Load Combinations for the Structural Analysis of Shipping Casks for Radioactive Material," U.S. Nuclear Regulatory Commission, March 1989.

(19) NUREG/CR-1815, "Recommendations for Protecting against Failure by Brittle Fracture in Ferritic Steel Shipping Containers Up to Four Inches Thick," W. R. Holman and R. T. Langland, U.S. Nuclear Regulatory Commission, 1981

(20) NUREG/CR-3019, "Recommended Welding Criteria for Use in the Fabrication of Shipping Containers for Radioactive Materials, R. E. Monroe et al., U.S. Nuclear Regulatory Commission, 1985.

(21) NUREG/CR-3854, "Fabrication Criteria for Shipping Containers," L. E. Fischer and W. Lai, U.S. Nuclear Regulatory Commission, 1985.

(22) NRC Information Notice 84-72, "Clarification of Conditions for Waste Shipments Subject to Hydrogen Gas Generation," U.S. Nuclear Regulatory Commission, September 10, 1984.

(23) ASTM D3350, "Standard Specification for Polyethylene Plastics Pipe and Fittings Materials," American Society for Testing and Materials, 2004.

(24) ASTM D2837, "Test Method for Obtaining Hydrostatic Design Basis for Thermoplastic Pipe Materials or Pressure Design Basis for Thermoplastic Pipe Products," American Society for Testing and Materials, 2004.

(25) M. Rahimi, NRC, to P. C. Gregory, WTS, "Request for Additional Information on ARROW-PAK Exemption Request," July 8, 2005.

(26) P. C. Gregory, WTS, to M. Rahimi, NRC, "Request for Additional Information on ARROW-PAK Exemption Request (Docket No. 71-9218, TAC No. L23811)," Feb. 17, 2006.

(27) M. Rahimi, NRC, to P. C. Gregory, WTS, "Second Request for Additional Information on ARROW-PAK Exemption Request," July 14, 2006.

(28) P. C. Gregory, WTS, to M. Rahimi, NRC, "Second Request for Additional Information on ARROW-PAK Exemption Request (Docket No. 71-9218, TAC No. L23811)," Oct. 17, 2006.

(29) Trent Hannah, "NRC Meeting – February 7, 2007," summary notes provided by Trent Hannah, BOH Environmental, during the site visit, July 12, 2007.

(30) D. C. Moody, DOE, to S.L. Tujague, "Path forward for Licensing ARROW-PAK for Use for Waste Isolation Pilot Project (WIPP)," March 8, 2007.

(31) RAI #2 Response Plan, presentation to NRC by WTS and BOH Environmental, Feb. 7, 2007.

(32) "Background Document on Pressure Vessels Subject to Impulsive Loads," prepared by Task Group on Impulsively Loaded Vessels, Special Working Group High Pressure Vessels (SWG/HPV), ASME Section VIII, Division 3, June 2007.

(33) SECY-07-0033, NRC Summary in the Weekly Information Report—March 1, 2007

(34) Review Team Visit with WIPP June 26-27, 2007

(35) D. B. Edwards, "Determination of the Ductile-Brittle Transition Temperature for Three HDPE Pipe Material," Independent Pipe Products, Inc., Bodycote Polymer–Broutman Laboratory, 2006.

(36) Z. Zhou, Dow Chemicals, to H. Svetlik, Independent Pipe Products, "Tensile Strength and LTHS of CONTINUUM DGDA 2490 and DGDA 2492 Pipe Materials," 2007.

(37) J. H. S. Lee, "Dynamic Parameters of Gaseous Detonations," *Annual Review of Fluid Mechanics*, Volume 16, 1984.

(38) J. E. Shepherd et al., "Unconfined Vapor Cloud Explosions: a New Perspective," *International Conference and Workshop on Modeling and Mitigating the Consequences of Accidental Releases*, 1991.

(39) S. B. Dorofeev et al., "Evaluation of the hydrogen explosion hazard," *Nuclear Engineering and Design*, Volume 148, 1994, pp. 305–316.

(40) J. Card et al., "DDT in Fuel–Air Mixtures at Elevated Temperatures and Pressures," *Shock Wave*s, Volume 14(3), 2005, pp. 167–173.

(41) M. Kuznetsov et al., "DDT in a Smooth Tube Filled With a Hydrogen-Oxygen Mixture," *Shock Waves*, Volume 14(3), 2005, pp. 205–215.

(42) A. I.Gavrikov, A. A.Efimenko, and S. B Dorofeev, "A model for detonation cell size prediction from chemical kinetics," Combustion and Flame, vol. 120, p19–33, 2000.

(43) Kees van Wingerden et al., "Detonations," Chapter 6 of *Gas Explosion Handbook*, Gexcon AS Fantoftvegen 38 P. O. Box 6015 Postterminalen N-5892, Bergen, Norway, 2003.

(44) Helen James, "Detonations," on-line paper from www.hse.gov.uk/foi/internalops/hid/din/539.pdf, October 1, 2001

(45) DOE-STD-5506-2007, "Preparation of Safety Basis Documents for Transuranic (TRU) Waste Facilities," U. S. Department of Energy, April 2007.

(46) A. Veser et al., Run-Up Distances To Supersonic Flames In Obstacle-Laden Tubes, "Journal de Physique IV". Volume12, #. Pr7-333 r.

(47) NUREG/CR-5275, "The Flame Facility, The Effect Of Obstacles And Transverse Venting On Flame Acceleration And Detonation For Hydrogen-Air Mixture At Large Scale," M. P. Sherman et al., April, 1989.

(48) D. Dunn-Rankin and R. F. Sawyer, "Tulip Flames: Changes in Shape of Premixed Flames Propagating in Closed Tubes" *Experiments in Fluids*, Volume 24, 1998, pp. 130-140.

(49) L. E. Bollinger et al., "Experimental And Theoretical Studies on the Formation of Detonation Waves in Variable Geometry Tubes," NASA TN D-1983, June 1963

(50) M. Devarakonda, WTS, e-mail to Phil Gregory, CBFO, "ArrowPak Use for Shipping High-Wattage Waste," Sept. 26, 2006.

(51) "Title 40 CFR Part 191 Subparts B and C Compliance Recertification Application," U. S Department of Energy report, 2004.DOE 2004

(52) "CH-TRU Waste Inventory Shippability Analysis: Waste Requiring Path Forward After Approval of Revision 19 of the TRUPACT-II SAR Revision 1," January 2001

(53) Sandia National Laboratory (SNL-NM), 1999, (Pu-238 Transuranic Waste Decision Analysis) Sandia National Laboratory's, Albuquerque, New Mexico

(54) LA-CP-01-509, "National TRU Waste Optimization Plan," December 21, 2001

(55) M. Devarakonda, WTS, e-mail to Marc Italiano, CBFO, "RE: Four Questions for Arrow-Pak Review," July 23, 2007

(56) 40 CFR 194, "Criteria for Certification and Re-Certification of the Waste Isolation Pilot Plant's Compliance with 40 CFR Part 191 Disposal Regulations," *Code of Federal Regulations*

# 8.0 CHARTER

## 8.1 CHARTER

WIPP began receiving and disposing TRU waste in March 1999. Some of the waste destined for WIPP, known as high-wattage TRU waste, cannot currently be shipped in the TRUPACT-II or HalfPACT shipping containers because it generates hydrogen gas that exceeds the limits set by NRC.

The ARROW-PAK container was designed by BOH Environmental, LLC, to provide a package for this high-wattage waste. Once loaded, three ARROW-PAK containers would be placed into one TRUPACT-II for shipment to WIPP. The ARROW-PAK has undergone testing required for TRU waste transportation containers, but has not been certified by the NRC for transport of TRU waste. Additional material research and/or tests may be required by NRC to obtain certification. (An ARROW-PAK container has been approved by DOT as a Type A package for transport of low-level waste.)

In 2003, the amount of high-wattage TRU waste was estimated to be approximately 3,000 $m^3$. DOE was interested in the ARROW-PAK as a possible container for high-wattage TRU waste at that time. However, recent estimates of the still unshipped inventory have dropped to about 40 $m^3$. Because of this significant decrease, the need for the ARROW-PAK has been questioned by DOE.

The objectives of the review are to conduct a technical review of the ARROW-PAK container, to evaluate its potential for certification by the NRC and for any needed approvals from the DOT, and to evaluate the potential need for this container in DOE's waste management program. This will be accomplished by reviewing technical data, evaluating analyses conducted on the container, reviewing waste inventory estimates and the basis for those estimates, and interviewing key personnel.

The results of this review will be used by DOE as one basis for proceeding with the development and use of the ARROW-PAK container.

## 8.2 SCOPE OF THE REVIEW

This review will focus on two primary areas:

- Review of the technical aspects of the ARROW-PAK container and its potential for certification by the NRC/DOT, and

- Review of the TRU waste inventory appropriate for use in ARROW-PAK containers and the programmatic need for this package.

The team will also evaluate the potential use of the ARROW-PAK for other non-TRU waste streams such as mixed low-level waste or debris waste.

The review team will review package safety analysis reports, test data, RAI from the NRC, DOE responses to those RAIs, and plans for any additional tests required for certification. The team will also review transuranic waste inventory estimates, including data on hydrogen-generating transuranic waste. Other related information may also be reviewed.

This review is not a management review, contract review, project baseline review, or a WIPP operations review.

## 8.3 TEAM MEMBERSHIP

The team will include five or more independent experts whose credentials and experience align with the specific lines of inquiry listed below and who collectively provide to the team sufficiently broad capability and flexibility to address the full range of issues that may emerge in this review. This includes expertise and extensive experience in the review and certification of waste packages, engineering, and management of radioactive waste management programs and systems. The experts will be free of any conflict-of-interest with respect to potential benefit from the use of the ARROW-PAK container.

Each team member is responsible for conducting a thorough, professional and independent review, for supporting the identification and resolution of technical issues, for participating in the development of draft and final reports, and for supporting resolution of comments and any points of disagreement. Collectively, the team is responsible for producing a high quality review report that is responsive to this charter, that includes unambiguous conclusions regarding the identified lines of inquiry, and that presents clearly any dissenting viewpoints. All team members will sign the final report.

Attachment 1 lists the team members and illustrates the applicability of their education and experience for this review.

## 8.4 PERIOD OF PERFORMANCE

This review will formally begin in mid-June 2007, although the collection of background information on the ARROW-PAK package and transuranic waste inventory data began in late May. The review shall include a combination of interviews with key personnel, information gathering sessions, and independent document reviews. The review is expected to be completed at the end of July 2007. The key milestones for the review team are as follows:

- Site visit to CBFO — June 26-27, 2007
- Site visit to BOH Environmental — July 12, 2007
- Briefing on Preliminary Results — July 24, 2007
- Final Report approved by Team Members — July 31, 2007

## 8.5 LINES OF INQUIRY

1. Can the ARROW-PAK container meet NRC regulations for certification?
2. What tests have been conducted on the ARROW-PAK to demonstrate its viability?
3. What were the results of those tests?
4. Were those tests bench scale, pilot scale, or full scale?
5. What waste simulants were used, if any, during the tests?
6. What analyses have been completed that would support NRC certification?
7. What additional tests and/or material research have been proposed by NRC, BOH, or DOE that are needed to obtain certification?
8. Will those tests and analyses (completed and proposed) provide sufficient basis for NRC certification?
9. Does the data exist to support certification by the NRC?
10. What additional data is needed to obtain NRC certification?
11. Has BOH or DOE requested an exemption from the NRC gas generation limits? (i.e. to go above the 5% by volume of hydrogen allowed within the inner most layer of confinement)
12. Can the ARROW-PAK be used without an exemption? If so, how?

13. Are there any show-stoppers that would prevent NRC certification of the ARROW-PAK?

14. What other approvals/exemptions are needed to ship the ARROW-PAK? (DOT, EPA, State of New Mexico, etc.)

15. What other potential uses exist for the ARROW-PAK in addition to the packaging of high-wattage TRU waste?

16. What is the total inventory of TRU waste?

17. How much TRU waste is currently considered high-wattage waste?

18. Where is the TRU waste currently stored? (total inventory and high-wattage waste)

19. What is the basis for previous (2003) and current inventory estimates of TRU waste? (total inventory and high-wattage waste)

20. Why did those inventory estimates change?

21. What are the estimates for future TRU waste generation?

22. What is the benefit of the ARROW-PAK to the WIPP program?

23. What would be required to incorporate the ARROW-PAK into the WIPP program if it were certified (regulatory and operational impacts etc?)

24. What is the impact to the WIPP program if the ARROW-PAK is not used or never receives NRC certification?

25. How much has DOE spent on the development and certification of the ARROW-PAK for the transportation of TRU waste?

26. How much has BOH spent on the development and certification of the ARROW-PAK for the transportation of TRU waste?

27. What is the cost and schedule of any additional tests or analyses required to obtain NRC certification?

28. What is the cost of one ARROW-PAK (purchase price, handling labor, support equipment, other)?

29. Can the ARROW-PAK be mass-produced at reasonable cost?

30. What is the schedule for ARROW-PAK production?

31. Has a cost/benefit analysis been developed for the use of the ARROW/PAK? If so, what were the results?

32. Please provide the information listed in Attachment 2, which is needed immediately to begin the review.

## 8.6 APPROVALS

Mark Gilbertson, Deputy Assistant Secretary
Office of Engineering and Technology
Office of Environmental Management
U.S. Department of Energy

6/21/07
Date

Dr. David C. Moody, Manager
Carlsbad Field Office
Office of Environmental Management
U.S. Department of Energy

6/27/07
Date

Stephen L. Tujague, President
BOH Environmental, LLC

7/12/07
Date

## Attachment 1. Team Members

Steven P. Schneider, Review Team Leader
Office of Waste Processing
Office of Environmental Management
U.S. Department of Energy
(former Director of WIPP Project Division, chemical engineer)

Dr. Rod Arbon, Team Deputy for Inventory Review
Chief Scientist
Advanced Mixed Waste Treatment Project
Bechtel BWXT Idaho
TRU inventory review

Alton Harris
Office of Disposal Operations
Office of Environmental Management
U.S. Department of Energy
TRU inventory review

Gerry O' Leary, LANL
TRU Program Director
TRU inventory review

Dr. Yung Liu, ANL, Team Deputy for Package Review
Lead for package review, nuclear engineer

Vikram N Shah, ANL
Package structural and ASME

Shiu-Wing Tam, ANL
Package containment and materials

Larry Fischer, LLNL
Package leak testing and thermal

Gerald Mok, LLNL,
Package structural, containment, ASME, and B&PV code

Dr. James M. Shuler
Manager, Packaging Certification Program
Office of Safety Management and Operations
U.S. Department of Energy
General oversight of package review

## Attachment 2. Initial Information Needed

In order to begin an independent review of the technical aspects of the ARROW-PAK package and its potential for certification, the following items are needed:

1. BOH general information package on ARROW-PAK, including photographs.

2. TRUPACT-II SAR Addendum for ARROW-PAK (latest edition).

3. TRUPACT-II SAR.

4. All NRC RAIs and responses to RAIs by applicant.

5. TRU waste inventory data, including previous (2003) and current estimates of high-wattage TRU waste.

6. Chronology of the development of the ARROW-PAK. (DOE-CBFO and BOH Environmental should both provide this information independently.)

7. Details regarding the package, including (a) engineering drawings; (b) material specifications and associated certification tests; (c) design codes and standards used for the design, fabrication, examination, proof-testing, and repair; (d) design analysis report demonstrating compliance with the chosen specifications, codes and standards in addition to the appropriate regulatory requirements; (e) test model details and results supporting the NRC application; and (f) current NRC application, supporting documents and correspondences.

This Page Intentionally Left Blank

## 9.0 DEFINITIONS

*ARROW-PAK.* The ARROW-PAK payload container is a 30-inch diameter cylindrical container with a 70.5-inch height, and is constructed of 1.765-inch minimum thickness, extra-high molecular weight, and high-density polyethylene pipe material with modified, 2.5-inch thick torispherical heads (closure devices) of the same material at each end. The ARROW-PAK is a proposed payload container for use in the TRUPACT-II shipping container.

*Challenging TRU Waste.* Challenging waste is defined as waste with no approved method for shipment to WIPP.

*Contact-handled transuranic waste.* Transuranic waste with a surface dose rate is ≥ 200 millirem per hour. Contact-handled transuranic waste can be safely handled without any shielding other than that provided by the waste container.

*Container*. Depending on the context a container is capable of holding waste directly (e.g., 55-gallon drum) or holding payload containers (e.g., TRUPACT-II holds 14 55-gallon drums).

*Debris Waste*. Solid material exceeding 2.36-inch particle size and that is (1) a manufactured object, (2) plant or animal matter, or (3) natural geological material.

*Deflagration. To burn rapidly with intense heat; technical term describing subsonic combustion. In terms of the ARROW-PAK, its design is to isolate and protect the TRUPACT-II packaging from potential occurrence of a significant chemical reaction (i.e., deflagration of a greater than 5% by volume mixture of hydrogen in air) in its CH-TRU waste contents.*

*High-wattage*. High-wattage waste, relative to CH-TRU waste, is a term that has generic application for waste that has the potential to exceed CH-TRAMPAC defined gas generation limits based on the matrix G-value (measure of a given materials gas generation propensity), and wattage.

*Macroencapsulation.* A waste treatment technology based on EPA hazardous waste treatment standards (40 CFR 268.42)

*Package.* Packaging, together with its radioactive contents as presented for transport.

*Packaging.* Assembly of components necessary to ensure compliance with the packaging requirements in CFR Part 71.

*Prohibited Waste.* Waste (e.g., unpunctured aerosol cans) not allowed in the payload container to ensure payload container integrity.

*Remote-handled transuranic waste.* Transuranic waste with a surface dose rate >200 millirem per hour. Because of its higher level of radioactivity, remote-handled transuranic waste must be handled and transported in shielded casks.

*Stoichiometric.* Ideal proportion of fuel to air that allows the fuel to burn completely.

*Transuranic.* Waste containing more than 100 nanocuries of alpha-emitting transuranic isotopes per gram of waste, with half-lives greater than 20 years.

*Waste Types I, II, and IV.* Solidified aqueous or homogeneous inorganic solids, solid inorganic, and solidified organic, respectively.

# 10.0 TEAM BIOGRAPHIES

**Steven P. Schneider**

Mr. Schneider has 29 years experience in management, engineering, construction, and technology development, including 16 years as a supervisor for the Department of Energy (DOE) and industry. He has established and directed large offices and multisite teams, and led challenging technical programs and construction projects. He has extensive experience in program and project management; chemical and waste processing; program integration and evaluation; radioactive waste management; facility construction, operations and maintenance; strategic planning; acquisition management; research and development; cost estimating; and budget formulation and execution.

Mr. Schneider has led many programs during his career. He is currently leading the External Technical Review process for Environmental Management (EM) projects. Mr. Schneider was the Acting Director of the River Protection Office at DOE Headquarters in Germantown, Maryland, where he led the waste processing program at the Hanford site and led efforts to obtain construction authorization for the multi-billion dollar Waste Treatment Plant. Mr. Schneider was also the Director of the EM Program Integration Office, the Director of the Waste Isolation Pilot Plant Project Division, the Chief of the EM Construction Branch, the Uranium Enrichment construction program manager, the repository cost program manager, and the DOE spent fuel research and development program manager.

Mr. Schneider has led several large independent review teams that improved costs and operations, and integrated business and technical activities. He led a review of EM program baselines and identified $2 billion in savings over ten years at eight sites. As the senior EM member of the Peer Review team, he developed and implemented a new system for categorizing and defending the budget. He led the development and publication of the Handbook on Roles and Responsibilities for Environmental Management, a policy document that was adopted by other DOE organizations.

Mr. Schneider has acted as a Deputy Assistant Secretary on numerous occasions and as the Chief of Staff for the Assistant Secretary for EM. He has coordinated programs with Congressional staff, federal executives, State and local government officials, scientific groups, and the public. He has held jobs in several engineering disciplines at the DOE, including chemical, nuclear and general engineering.

Before joining the DOE in 1980, Mr. Schneider was a shift supervisor for two years at American Cyanamid in charge of chemical processing at a resins production plant.

Mr. Schneider has had a long commitment to his church and community, having volunteered as an administrator and coach for nearly ten years. He was appointed a Commissioner by the Mayor and City Council of Rockville, Maryland, to the Rockville Science, Technology and Environment Commission. He served as Director of the St. Mary's Catholic Youth Organization, St. Mary's football coordinator, and coached youth football and basketball. He also served as a member of the St. Mary's Parish Council.

Mr. Schneider received a B.S. in Chemical Engineering from the University of Maryland in 1978.

# External Technical Review of ARROW-PAK Container

**Rod E. Arbon**

Dr. Arbon (Ph.D. Analytical Chemistry Montana State University) has over fifteen years experience providing technical, analytical, regulatory, and project management skills relative to nuclear waste management. Dr. Arbon has used this experience in the strategic planning and successful start-up and operation of multiple projects such as the 3100 $m^3$ Project, Advanced Mixed Waste Treatment Project, and Accelerated Retrieval Project. This experience has given Dr. Arbon a unique understanding of the complex-wide challenges associated with the characterization and shipment of problematic transuranic (TRU) waste.

**Yung Y. Liu, Sc.D.**
**Nuclear Engineer**

Dr. Liu has 29 years of experience as principal investigator, theorist, experimenter, and manager of various materials and engineering technology programs related to nuclear fission, fusion, advanced fossil energy systems, and packaging for storage, transportation, and disposal of radioactive and fissile materials.

He has conducted basic and applied research in the areas of properties and behavior of materials under elevated temperature and irradiation environment. He is currently the manager of the Argonne's Safety Analysis Report for Packaging (SARP) Review Group.

**PROFESSIONAL EXPERIENCE**

Managed a team of subject matter experts for certification review of the safety analysis reports for packaging and transportation of fissile and radioactive materials since 1997. Previously served as the Lead Engineer in radiation shielding, nuclear criticality safety, and structural evaluation for transportation packagings containing various fissile and radioactive materials, e.g., uranium hexafluoride, uranium and plutonium metals and oxides, source capsules and accelerator targets, spent fuel, transuranic waste, etc. Also provided direct technical assistance to DOE on various technical and regulatory issues related to long-term storage of plutonium metals and oxides (DOE-3013 Standard); removal of double containment requirement for plutonium in 10 CFR 71; hydrogen combustion, deflagration, and detonation; and life cycle management, safety, and security of DOE's fissile and radioactive materials packages, including development and application of advanced radiofrequency identification (RFID) technology. Technical assistance also includes conducting two annual training courses for DOE on quality assurance and application of the ASME Code to radioactive material packaging, and production and distribution of training and public information videos.

Managed the NRC project on the development of guidance documents for aging management and license renewal of nuclear power plants (1997-2001). These guidance documents are the Standard Review Plan for License Renewal (NUREG-1800) and Generic Aging Lessons Learned (NUREG-1801). Also provided technical assistance and managed over 40 NRC projects on operating reactor licensing actions and regulatory improvement activities (1997-2006). Extensive interactions with NRC staff, industry, and public interest groups, e.g., the Union of Concerned Scientists. Served as expert witness in public meetings held by the Advisory Committee on Reactor Safeguards (ACRS) on aging management and license renewal of nuclear power plants.

**WORK HISTORY**

1978-present Staff Engineer, Argonne National Laboratory, Argonne, IL

1995-1997 Consultant, MDS Nordion, Canada

1977-1978 Staff Engineer, Entropy Limited, Lincoln, MA

**EDUCATION**

Sc.D./M.S. Nuclear Engineering, MIT, 1978/1976

B.S. Nuclear Engineering, National Tsing-Hua University, Taiwan, 1971

**PUBLICATION**

More than 100 publications on fission, fusion, fossil energy, packaging for storage and transportation of fissile and radioactive materials.

**Dr. James M. Shuler**

**EDUCATION**: D.P.A., Public Administration, University of Southern California, 1999, Dissertation: Using Performance Information to Facilitate Decisionmaking in Transportation Logistics.

M.P.A., Public Administration, University of Southern California, 1997

M.S., Radiation Science (Health Physics Option), Georgetown University, 1988, Thesis: A Comparison of Radiation Exposures of Highway Drivers from Various Types of Radioactive Materials

M.A., Management and Supervision: Industrial Management, Central Michigan University, 1977

B.S., Botany, Clemson University, 1974

**OTHER**: Authored: Understanding Organizations and Management through Triangle Analysis and Performance. Boca Raton, FL: Universal Publishers. 2006. ISBN: 158112919X.

Understanding Radiation Science: Basic Nuclear and Health Physics. Boca Raton, FL: Universal Publishers. 2006. ISBN: 1581129076.

Associate Graduate Faculty, Central Michigan University, teaching "Organizational Theory" and "Technology and Environment"

Registered Radiation Protection Technologist — Certified Hazard Control Manager

Certified Environmental Trainer — Registered Environmental Manager

Certified Hazardous Materials Manager — Q Clearance

**CAREER HIGHLIGHTS**:

HEALTH PHYSICIST (GS-1306-15), U.S. Department of Energy, Office of Environmental Management, EM-60 (CLOV), Washington, DC 20585, 301-903-5513, April 1, 1996 to Present.

Packaging Certification Program Manager reporting directly to the DAS for Safety Management & Operations. Responsible for reviewing Safety Analysis Reports for Packagings for various Type B radioactive material casks. Manages over 50 contractors in four national labs (LLNL, ANL, ORNL and SRNL) and a "free and open bid" contractor with an annual budget over $7M. Project manager for Reengineering EM's Packaging Certification Program. Served as project manager for the Reinventing DOE's Transportation and Packaging Complex Program. Developed the "Strategic Plan for the Office of Hazardous Materials Package Approval and Safety," the "Strategic Plan for Reinventing the Department of Energy's Transportation and Packaging Complex," and the "DOE's Transportation Options Analysis."

PHYSICAL SCIENTIST (GS-1301-15), U.S. Department of Energy, Office of Environment, Safety and Health, EH-32 (GTN), Washington, DC 20585, 301-903-5513, April 15, 1994 to March 31,1996.

Served as a transportation and packaging mentor for the ES&H Richland Mentoring Team. Was responsible for radiological safety as a member of the Working Group Assessment Team for the Mound and Oak Ridge Plutonium ES&H Vulnerability Assessment. Served as expert on safety assessment of all aspects of transportation and packaging for the Transportation and Packaging Safety Division. Provided high level oversight and leadership in the development of transportation and packaging requirements and evaluation of operations and facilities. Provided technical and managerial assistance to the Fernald, Mound and Oakland Offices.

SENIOR HEALTH PHYSICIST (GS-1306-15), U.S. Department of Energy, Office of Defense Programs, DP-9.12 and DP-35 (GTN), Washington, DC 20585, 301-903-5513, February 21, 1993 to April 14, 1994.

Served as radiological mentor for the Los Alamos National Laboratory Management Assistance Team (Mentor Team). Provided advice and assistance in solution of critical health physics problems. Provided high level oversight and leadership in the development of requirements and evaluation of operations and facilities from the standpoint of human protection from radiation hazards, including detection, measuring, eliminating, reducing or controlling exposure.

HEALTH PHYSICIST (GS-1306-13), U.S. Department of Energy, Radiation Protection Branch, P.O. Box A, Aiken, SC 29802, 803-725-4808, December 17, 1989 to February 20, 1993.

Responsible for oversight of radiation protection at the Savannah River Site. Managed the Radiation Safety Appraisal Program, the Surveillance Program and the Corrective Actions Followup Program. Team Leader for twenty-five Radiation Safety Functional Appraisals and thirty-seven Radiation Safety Surveillances.

MANAGER, PACKAGING and TRANSPORTATION SAFETY PROGRAM (GS-1301-14), U.S. Department of Energy, EH-321 (GTN), Washington, DC 20545, August 15, 1988 to December 16, 1989.

Served as senior technical scientist for the Department for the packaging and transportation safety program, initiated budget requests and justified operating expenditures including staffing requirements. Developed and maintained the DOE order (DOE 5480.3) which established safety requirements for packaging and transportation of hazardous materials, hazardous substances and hazardous wastes.

RADIOACTIVE MATERIALS ENFORCEMENT SPECIALIST (GM-2101-13), U.S. Department of Transportation, Enforcement Division, DHM-42, Washington, DC 20590, April 4, 1983 to August 13, 1988 and November 13, 1979 to November 13, 1981.

Inspected over 1700 facilities in 48 states, Canada, Mexico and Puerto Rico taking enforcement actions, as appropriate.

RADWASTE/TRANSPORTATION SPECIALIST, Applied Technology of Barnwell, Inc., Barnwell, SC 29812, November 15, 1981 to March 30, 1983.

CUSTOMER and COMPLIANCE REPRESENTATIVE/SUPERVISOR of HEALTH PHYSICS, Chem-Nuclear Systems, Inc., Barnwell, SC 29812, January 8. 1978 to November 11. 1979.

HEALTH PHYSICS TECHNICIAN, Allied-General Nuclear Services, Barnwell, SC 29812, January 5, 1975 to January 5, 1979.

# External Technical Review of ARROW-PAK Container

**Vikram N. Shah, Ph.D.**
**Mechanical Engineer**

Dr. Shah has 32 years of experience in research and development in structural dynamics, stress analysis, material degradation and aging management of nuclear power plant components, and storage and transportation of radioactive materials. He is currently the lead structural engineer in the Argonne's Safety Analysis Report for Packaging (SARP) Review Group.

**PROFESSIONAL EXPERIENCE**

Lead engineer (structural evaluation) in the Argonne's SARP review group. He is the main instructor of the DOE/EM-60 training course on the application of the ASME Code to radioactive material transportation packagings. He is also a current member in the ASME Section III Subgroup on Containment Systems for Spent Fuel and High Level Waste Storage and Transport Packagings.

Developed computational methods for nonlinear transient analysis of structures subject to seismic excitation and analysis of pellet-cladding mechanical interactions in light water reactor fuel rods. Worked on evaluation of material degradation and aging management of major nuclear power plant components. He has assessed leak events in pressurized water reactor systems, cracking of nozzles of control rod drive mechanisms, cracking of feedwater piping and nozzles, and inspection techniques of steam generator tubes. He was a member of the ASME Section XI Working Groups on Plant Life Extension and Operating Plant Criteria. He was involved in the USNRC projects related to license renewal, in preparing the GALL (Generic Aging Lessons Learned) report and reviewing the license renewal applications. He has presented seminars on aging management of light water reactor components in the U.S. and abroad.

**WORK HISTORY**

2000 - Present Mechanical Engineer, Argonne National Laboratory

1987 - 2000 Consulting Engineer, Idaho National Engineering and Environmental Laboratory

1980 - 1986 Senior Engineer, Idaho National Engineering Laboratory

1982 - 1989 Instructor of Mechanical Engineering, University of Idaho - Idaho Falls

1974 - 1980 Senior Engineer, Westinghouse Electric Corporation

**EDUCATION**

Ph.D. Engineering Mechanics, University of Wisconsin-Madison, 1974

M.S. Metallurgy, University of Idaho, 2000

M.S. Mechanical Engineering, University of Wisconsin-Madison, 1965

B.E. Mechanical Engineering, Gujarat University, India, 1963

**PUBLICATION**

Author of a book, Aging and Life Extension of Major Light Water Reactor Components, published by the Elsevier Science Publishing Co. Also authored 11 NUREG reports related to aging of nuclear power plant components. Published 21 papers in peer-reviewed journals and 46 in conference proceedings.

# External Technical Review of ARROW-PAK Container

## Alton Harris

Alton Harris is a general engineer with the Department of Energy's Office of Environmental Management. Since 1992, Mr. Harris has worked on the National Transuranic Waste Program with emphasis on Waste Isolation Pilot Plant operations, transportation, and emergency preparedness. In addition, Mr. Harris has participated on other Office of Environmental Management shipping campaigns, such as the Urgent-Relief Acceptance of Foreign Research Reactor Spent Nuclear Fuel. Mr. Harris was assigned at the Albuquerque Operations Office and the Oak Ridge Operations Office before coming to Washington, D.C. Mr. holds a Bachelor of Science degree in Mechanical Engineering, and Master's degrees in Technical Management, Systems Engineering, and Environmental Engineering. Mr. Harris is currently pursuing a doctoral degree in Organizational Leadership.

**Shiu-Wing Tam, Ph.D.**
**Metallurgist/Materials Engineer**

Dr. Tam has 33 years of experience in nuclear materials research related to fission and fusion technologies and nuclear waste. He is currently the lead engineer on containment and materials in the Argonne's Safety Analysis Report for Packaging (SARP) Review Group. His experience and other interests include belowground transport of contaminants of nuclear waste, tritium transport in fusion materials and pressurized water reactors, materials-related safety issues in nuclear reactor license renewal, nanoscale heat transfer process and applications, and monitoring and control of electric power grid instability by nonlinear dynamics.

**PROFESSIONAL EXPERIENCE**

- Lead engineer (containment and materials) in the Argonne's SARP review group. One of the main instructors of the DOE/EM-60 training course on QA and application of the ASME Code to radioactive material packaging.

- Tritium transport in fusion solid breeder materials. Fission gas behavior in nuclear fuel, chemistry and transport of volatile fission products.

- Aging degradation and management of systems, structures, and components in nuclear power plants (Auxiliary Systems).

- Statistical analysis of corrosion and crack propagation in steam generator tubings.

- Modeling of thermal behavior of sphere-pac nuclear fuels. Nanoscale heat transfer phenomena, nanofluid, nanogas.

- Applications of complex chemical equilibria, Monte Carlo simulation methods, statistics, atomisticlevel simulations, and finite element techniques to nuclear materials research.

**WORK HISTORY**

1974-present Metallurgist/Materials Engineer, Argonne National Laboratory, IL

1990-1994 Group Leader, Solid breeder materials group, ANL

1993-1998 Adjunct Professor of Physics, Michigan Technological University

1986-1990 Adjunct Professor of Materials Science and Engineering, University of Illinois at Chicago

**EDUCATION**

Ph.D. (Materials Science), State University of New York, Stony Brook, 1974.
M.S. (Electrical Engineering), State University of New York, Stony Brook, 1971.

**PUBLICATION**

Author of over 40 publications in refereed journals, book chapters, and proceedings; 4 U.S. patents and many formal technical reports.

# External Technical Review of ARROW-PAK Container

**Gerald A. O'Leary, P.G.**

Mr. O'Leary has more than 25 years of Operations, Program, and Project Management experience in the environmental and waste management industry. While at the Rocky Flats Environmental Technology Site, he was the Kaiser-Hill, L.L.C. Transuranic Waste Disposition Project Director and was responsible for the successful disposition of all the transuranic waste from the site, approximately 72,000, 55-gallon drum equivalents to the Waste Isolation Pilot Plant in New Mexico. Following his tenure at Rocky Flats, Mr. O'Leary held the same position at the Idaho National Laboratory for CH2M-WGI, L.L.C. where he established the life cycle baseline for the disposition of all contact and remote handled waste for the Idaho Cleanup Project. He also established the initial operational approaches that subsequently lead to the first shipment of remote handled waste from the Idaho National Laboratory after his departure in May 2006. He is currently the Los Alamos National Security, L.L.C. Transuranic Waste Disposition Project Director where he is responsible for the disposition of both contact-handled and remote handled waste from the Los Alamos National Laboratory.

## LARRY E. FISCHER

### AREAS OF EXPERTISE

Larry Fischer's area of expertise is general mechanical and nuclear engineering.

He currently supports the Transportation and Risk Management Programs in a consulting role after retiring from LLNL as the Associate Program Leader for Transportation and Risk Management. He has over thirty years combined experience in the research and development, testing and manufacturing of high energy-power density systems for mechanical, electro-mechanical and nuclear applications. He worked at Hughes Aircraft, United Technologies Corporation, GE Nuclear, and LLNL. He has been active in the development of national and international standards

### EMPLOYMENT HISTORY

1983 –Present Lawrence Livermore National Laboratory, Livermore, CA

- Consultant (06-07)
- Associate Program Leader, Transportation & Risk (03-06)
- Deputy Division Leader, New Technologies Engineering Division ((97-03)
- Associate Program Leader, Nuclear Facilities and Transportation (89-97)
- Group Leader, Systems Engineering (86-89)
- Project Leader, Solid Mechanics (83 -86)

1982 – 1983 NUTECH, San Jose, CA

- Project Manager

1970 – 1982 General Electric, Nuclear Operations, San Jose, CA

- Manager, Spent Fuel Transportation
- Program Manager, BWR6 Systems Design
- Senior Engineer, Control Systems Development
- Project Engineer, Neutron Sensor Design

### EXPERIENCE

- Provide program management: secure and oversee multi-disciplinary projects.
- Provide line management: hire and administer engineers.
- Provide project management; meet budgets, schedules, and deliverables.
- Develop guidance for reviewing safety analysis reports for nuclear materials transport.
- Develop standards on leak testing nuclear structures and transportation
- Lead the SARP preparation for the transportation of the Shippingport nuclear reactor vessel.

- Lead design, analysis, and testing in these areas: heat transfer, structures (ASME Code), materials, mechanical/nuclear systems, nuclear containment, radiation shielding and nuclear criticality.
- Develop acceptance criteria for transporting plutonium by air.
- Evaluate and assess transport regulations for spent fuel casks.
- U.S. Pat. Numbers 4,418,559/4,521,370/4,780,269/6,790,030/7040094/others pending

**EDUCATION / CERTIFICATIONS / LICENSES**

MS University of California, Los Angeles, Mechanical Engineering, 1966

BS Stanford University, Mechanical Engineering, 1963

ME Professional Engineer, CA# M15679

**SOCIETIES AND COMMITTEES**

ANSI N14 Standards, N14.5 Chairman, N14.32 Chairman

ISO Nuclear Standards, WG1 Convenor

Member, American Nuclear Society

Member, American Society of Mechanical Engineers

**GERALD C. MOK**

**EDUCATION / CERTIFICATIONS / LICENSES**

- Ph.D. Engineering, Brown University, Providence, RI, 1964
- Sc.M. Engineering, Brown University, Providence, RI, 1961
- B.S. Civil Engineering, National Taiwan University, Taiwan, 1958

Registered Professional Civil Engineer, State of California

**EMPLOYMENT AND EXPERIENCE HISTORY**

1987-Present Project Leader, Packaging and Transportation Program

Lawrence Livermore National Laboratory, Livermore, CA, USA

Dr. Mok directs and conducts internally- and externally-funded research projects in structural safety of nuclear equipment and facilities. He is a primary developer of the SCANS computer program which is used by US regulators to assess the thermal and structural performance of nuclear spent-fuel shipping casks/packages submitted for licensing. He also develops guidelines, methods, criteria, and teaches training courses on structural evaluation and testing of these packages. He is currently the principal investigator of a research project on seismic isolation.

1973-1987 Principal Engineer, Nuclear Energy Division

General Electric Company, San Jose, CA, USA

Dr. Mok developed and controlled for the division all major computer methods/models for seismic, dynamic, vibration, and thermal-stress analyses of GE nuclear reactors (BWR and ABWR) pipings and buildings. He also taught engineers/analysts the use of these tools for five years. He has received awards for several of his achievements: for convincing US regulators on the adequacy of GE response-spectrum method for seismic analysis of pipings and for demonstrating the safety of the IF-300 spent-fuel shipping cask and basket. He has also demonstrated the flow-induced-vibration resistance of the ABWR in-core assembly, and has monitored the start-up vibrations of the Perry-I BWR internals. He has developed the first production version of GE's reactor-pressure-vessel-fatigue monitor.

1985-1986 Adjunct Instructor, Mechanical Engineering Dept.
Santa Clara University, Santa Clara, CA, USA

Dr. Mok taught a graduate course on composite materials.

1966-1973 Research Engineer, Missile and Space Division
General Electric Company, King of Prussia, PA, USA

Dr. Mok developed methods and criteria for evaluating and predicting the mechanical performance of missile components and materials in acoustical, vibration, shock, and impact environments. He provided structural design criteria for graphite composite materials for high-temperature applications. He was recognized in the company for mathematically justifying GE and US-Navy shock-design criteria, for predicting fabrication failures of polar-weave composites, and for interpreting the acoustic-test results of Minuteman-II missile shrouds.

1964-1966 Research Physicist, US Army Ballistic Research Laboratories
Aberdeen Proving Ground, MD, USA

Dr. Mok was responsible for conducting and monitoring applied research on experimental and numerical techniques for hypervelocity impact studies.

| | |
|---|---|
| 1964 Summer | Visiting Assistant Professor, Department of Engineering Mechanics<br>Pennsylvania State University, State College, PA, USA |
| 1958-1964 | Half-time Research Assistant, Division of Engineering<br>Brown University, Providence, RI, USA |

Mr. Mok conducted and assisted in basic research on impact testing and impact behavior of metallic materials, and on experimental stress analysis.

**SOCIETIES AND COMMITTEES**

- American Society of Mechanical Engineers
- American Institute of Aeronautics and Astronautics