Pilot Plant Lessons Learned Technical Exchange

Jack Kasper
Vice President / SWPF Design Build Manager
Parsons Infrastructure & Technology Group
December 4-5, 2007

PARSONS

Agenda

- Technology Development and Deployment Phases
- Technology Development
- Pilot Scale Testing
- Salt Waste Processing Facility (SWPF) Overview
- SWPF Pilot Scale Tests
- Lessons Learned

Technology Development and Deployment Phases

- Identify Technology Needs
- Establish/Prioritize Technology Options
- Proof of Principle Testing
- Technology and Architecture (Equipment) Selection
- Pilot Scale Testing
- Cold and Hot Commissioning

Overall Goal:
Deliver Successful Technology Solutions

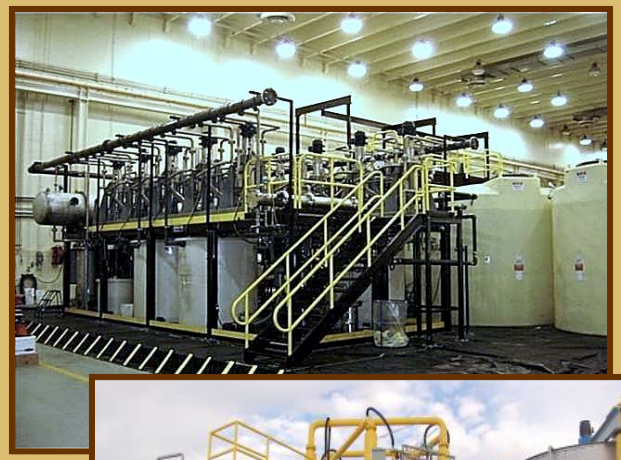

Key Metric: Technology Readiness Assessment
Key Tool: Technology Development and Demonstration Plans

Technology Development Testing

- Technology Downselect
  - Due diligence review of technology options
  - Evaluate options based on technology maturity and other "go/no go" criteria
- Proof of Concept Testing (i.e., "Research and Development")
  - Typically Bench Scale tests to demonstrate efficacy of alternative technologies
  - R&D results provide input into technology selection process

Technology Development Testing (cont)

- Technology Selection
  - Efficacy of technologies, previous deployment experience (i.e., technical maturity), scale-up risk, and cost/schedule are weighed
  - Nuclear safety strategy and project cost/schedule range is dependent on technology selection
  - Key process technologies <u>should</u> be selected prior to CD-0 (Conceptual Design) and <u>must</u> be selected prior to CD-1 (Preliminary Design

Pilot Scale Testing

- Recommended for scale-dependent processes or where process scale exceeds capability of commercially available hardware
- Engineering Scale (less than Full Scale) testing is appropriate in cases where:
  - Test results are readily scaleable with minimal risk
  - Cost/schedule impact for Full Scale testing is prohibitive

Pilot Scale Testing (cont)

- Full Scale testing (in prototypical configuration/environment) is preferable wherever possible
  - Eliminates technology and equipment scaling risks
  - Allows direct verification of design adequacy
  - Allows evaluation of operability, maintainability, testability, and long-term reliability of prototypical hardware
  - Provides platform for Operator and Maintenance craft training and for O&M procedure validation

Pilot Scale Testing (cont)

- Engineering Scale or Full Scale testing should be performed for all new technologies that are mission critical during Preliminary Design and prior to CD-2 (Final Design)
  - Facility design is sufficiently mature to develop prototypical test system design
  - Test results are available early enough to modify design prior to procurement of engineered equipment
  - Test results are indispensable for technology maturity assessments, risk analysis, and cost/schedule estimates – all of which are needed for CD-2 approval

Salt Waste Processing Facility (SWPF) Overview

- Project/Facility Mission
- Process Overview
- Project Schedule

SWPF Project Mission

- Provide a facility that removes and concentrates high activity constituents (strontium, actinides, and cesium) from bulk salt solutions
  - Concentrated high activity waste is sent to Defense Waste Processing Facility (DWPF) to be vitrified
  - Remaining low activity salt waste is sent to the Saltstone Facility to be disposed of in grout
- Key Performance Parameters:
  - Achieve design throughput of 7.3 Mgal/yr
  - Waste products must meet Waste Acceptance Criteria for DWPF and Saltstone Facility
  - Achieve Concentration Factor of ≥12 (volume of decontaminated salt solution vs. volume of high activity waste products)

SWPF Waste Tank Composite Inventory

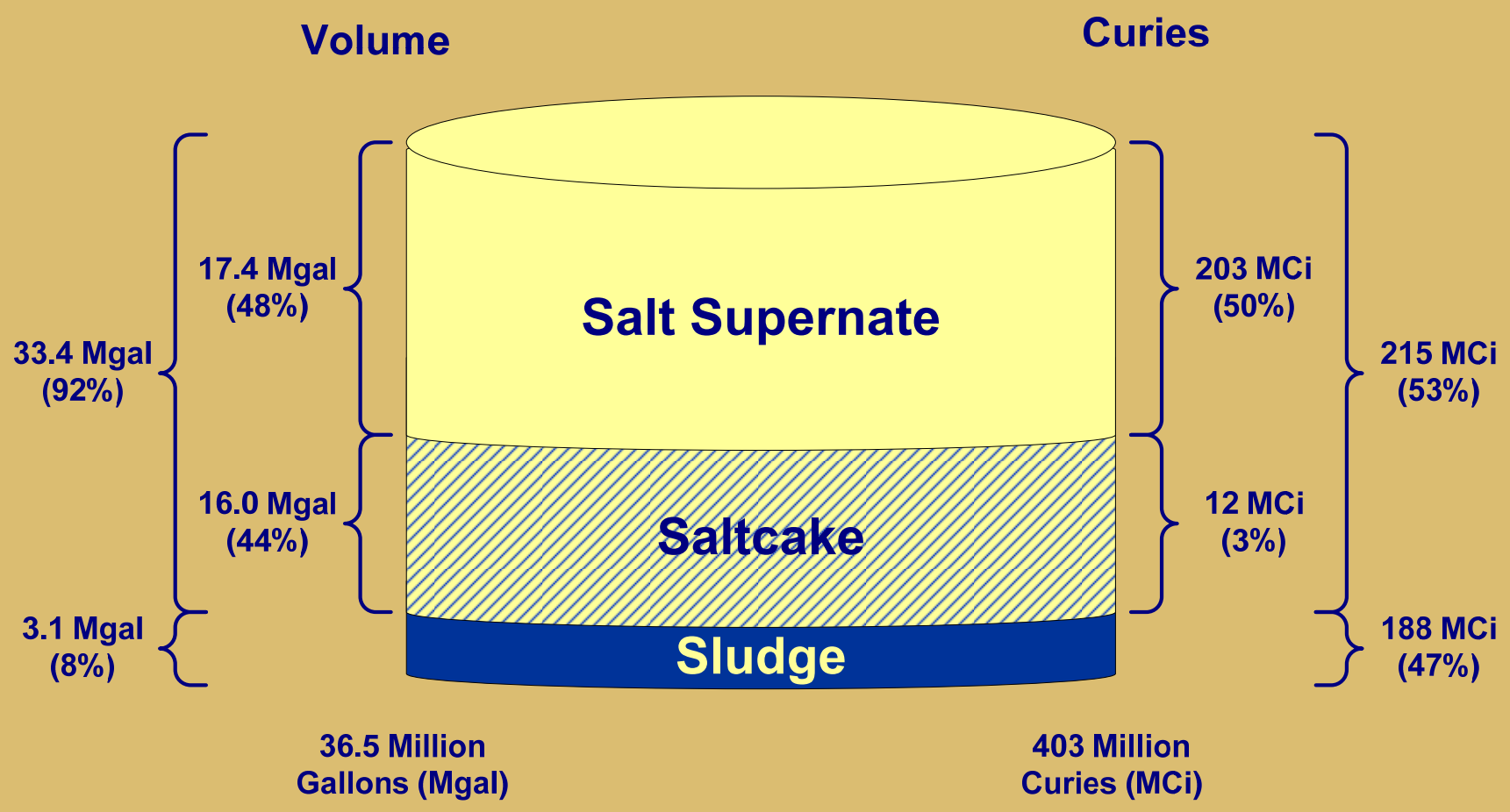

Facility Design Layout

SWPF Process Overview

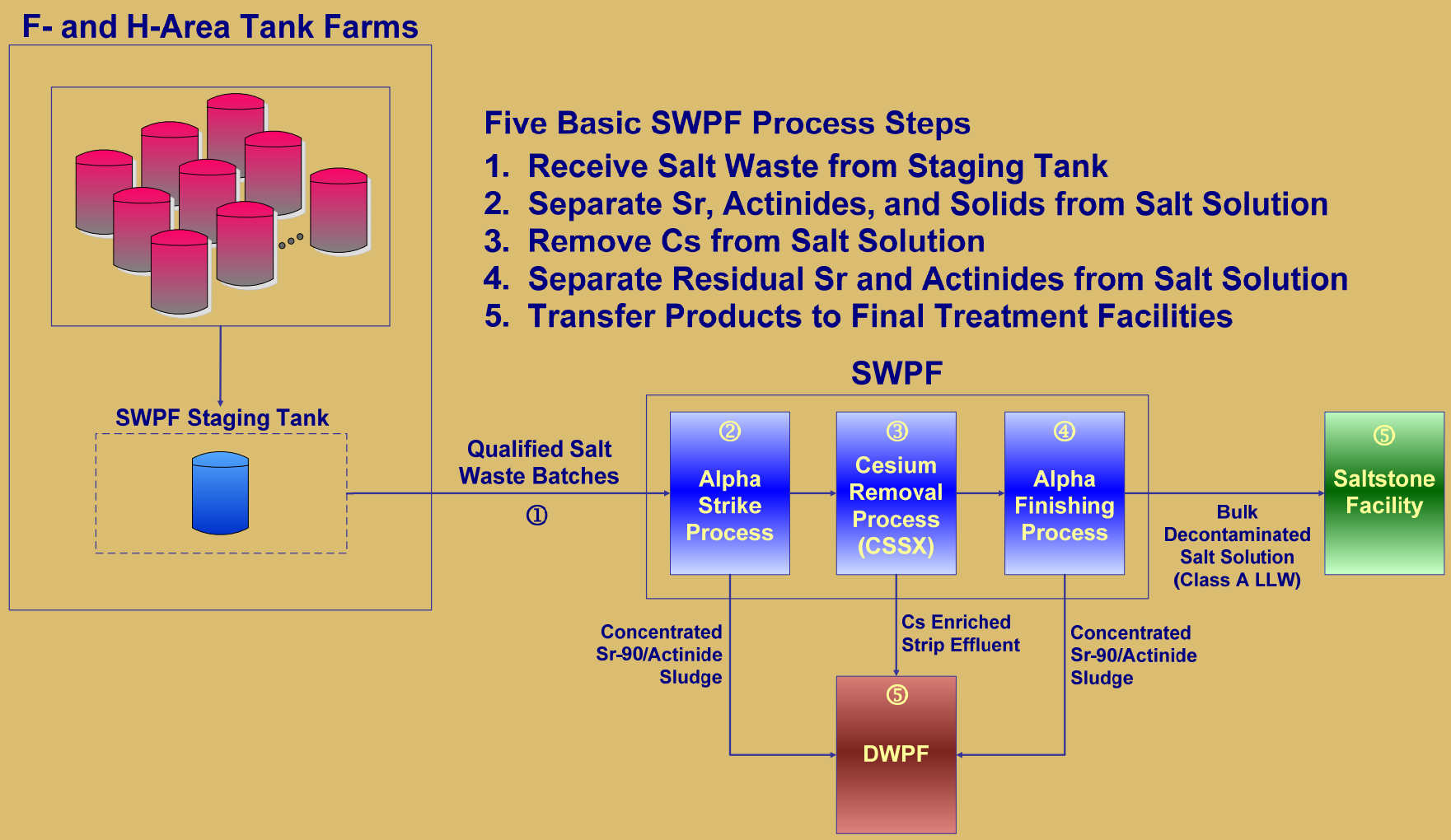

Five Basic SWPF Process Steps

1. Receive Salt Waste from Staging Tank
2. Separate Sr, Actinides, and Solids from Salt Solution
3. Remove Cs from Salt Solution
4. Separate Residual Sr and Actinides from Salt Solution
5. Transfer Products to Final Treatment Facilities

SRS Liquid Waste System

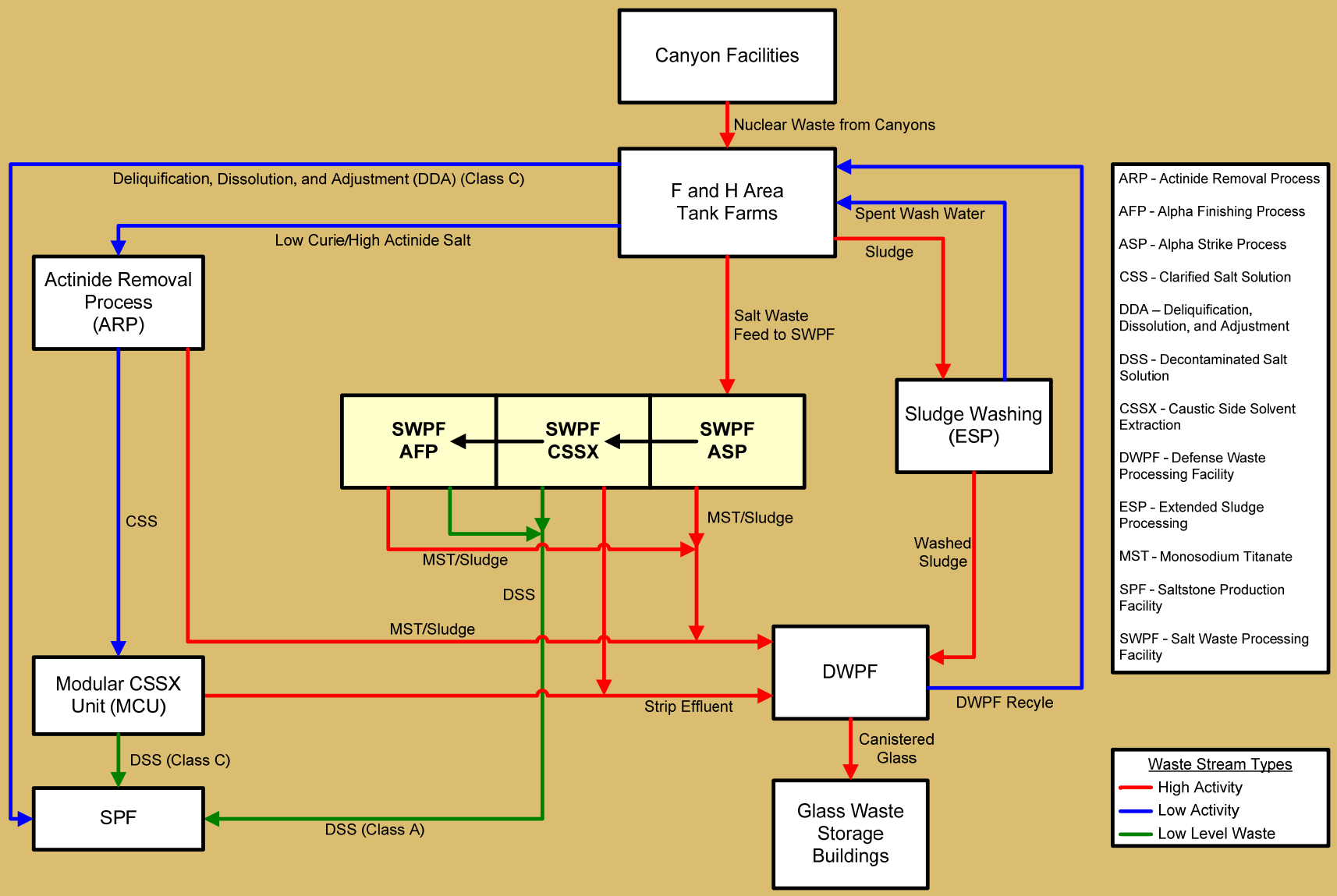

SWPF Process Overview

- SWPF uses two-stage treatment process
  - Alpha Strike Process (ASP) for strontium and actinide separation/removal
  - Caustic Side Solvent Extraction (CSSX) for cesium separation/removal

SWPF Process Overview (cont)

- ASP Process
  - Monosodium Titanate (MST) is added to waste feed to adsorb Sr and actinides (principally Pu)
  - MST is concentrated (5-7 wt.%) by recirculation through Cross Flow Filter (CFF)
  - MST sludge is sent to DWPF for vitrification
  - Clarified salt solution (CFF filtrate) is sent to CSSX for Cs separation/removal

Alpha Strike Process

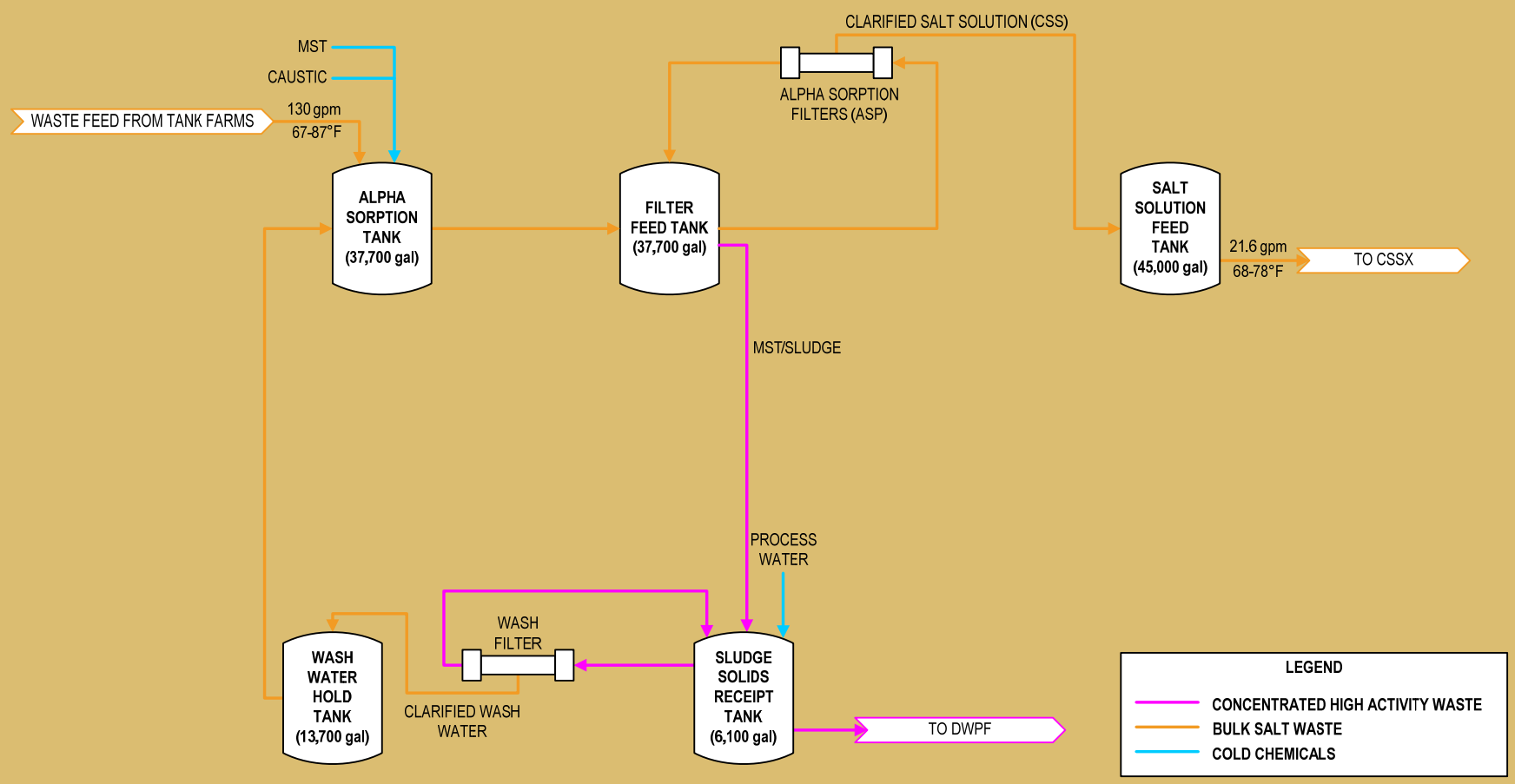

SWPF Process Overview (cont)

- CSSX Process
  - Engineered solvent (BOBCalixC6 dissolved in Isopar®L) is mixed with salt solution to extract Cs
  - "Extraction" centrifugal contactors separate organic and aqueous phases
  - Cs-depleted salt solution is sent to Saltstone Facility for disposal in grout or to second alpha strike process in SWPF (if required) for additional Sr/actinide removal
  - Cs-laden solvent is mixed with dilute nitric acid to strip Cs
  - "Strip" centrifugal contactors separate phases
  - Solvent is returned/recycled to extraction contactors and "strip effluent" is sent to DWPF for vitrification

CSSX Process

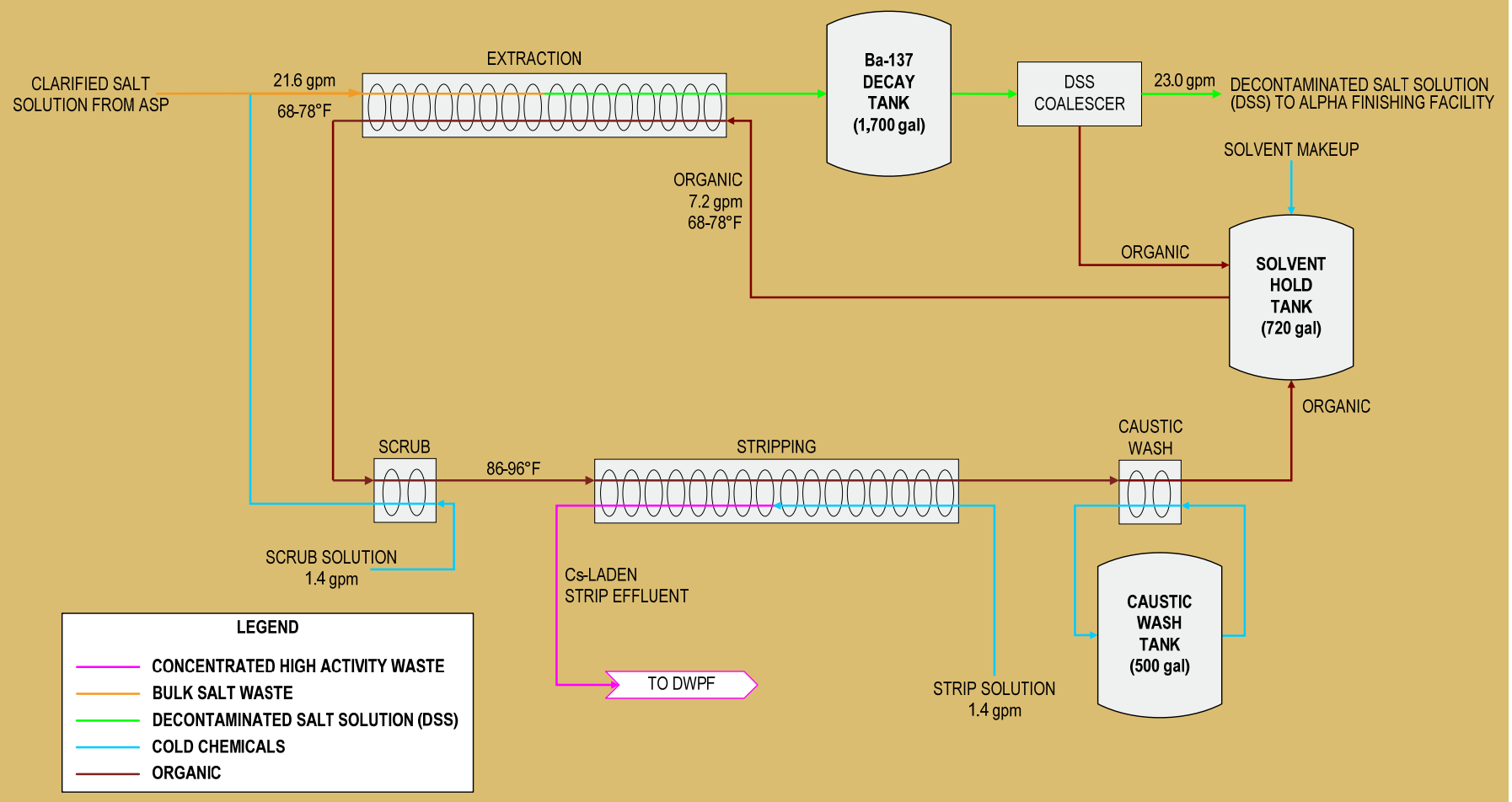

Project Schedule

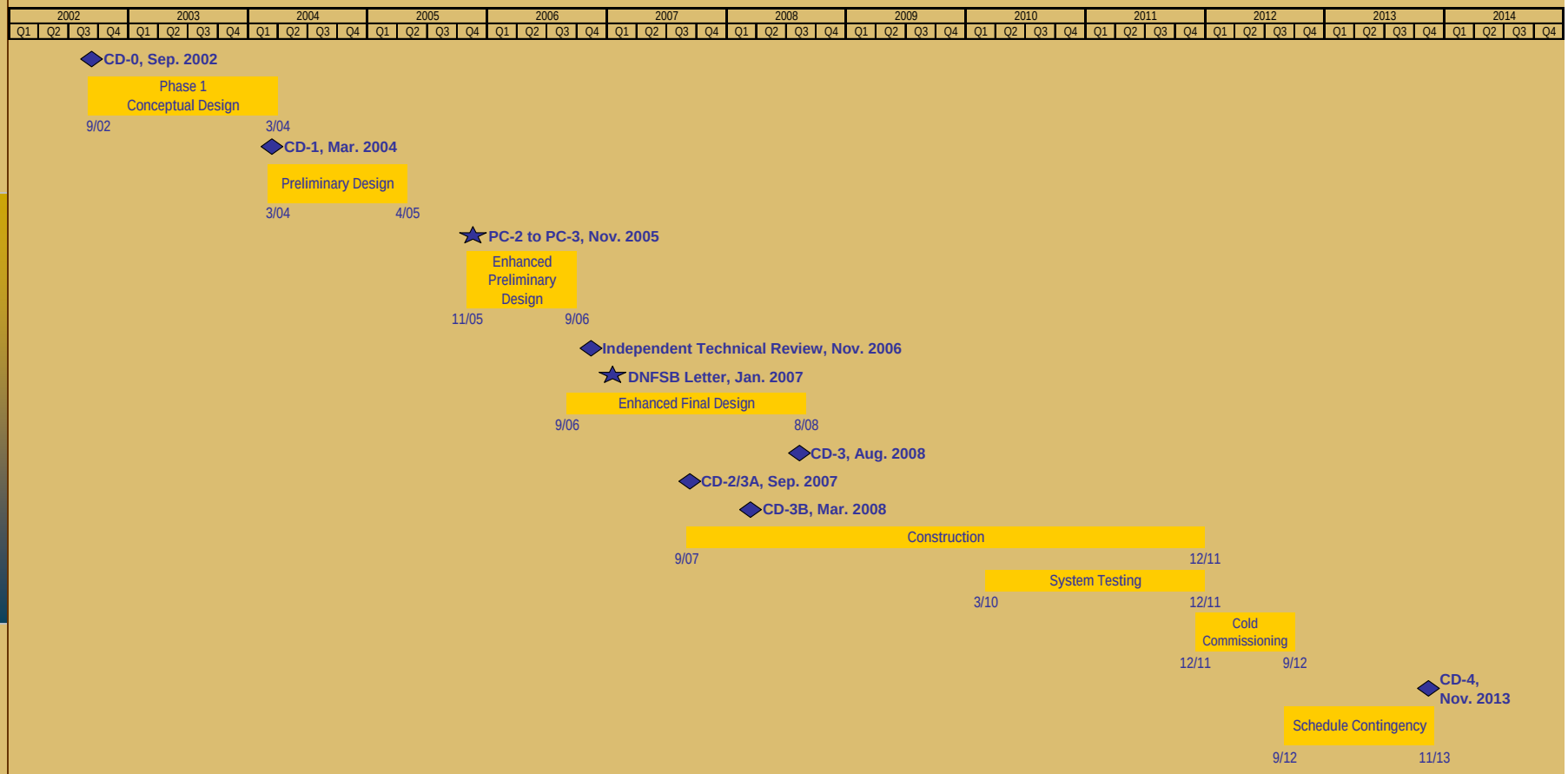

SWPF Pilot Scale Tests

- Pilot Testing During Conceptual Design
- Pilot Testing During Preliminary Design
- Pilot Testing During Final Design
- Future Reliability and Maintainability Testing

Key Process Technologies

- MST adsorption (batch wise process – not scale dependent)
- MST/solids mixing via Air Pulse Agitators (APAs)
- MST/solids concentration via filtration through CFF
- Organic/aqueous mixing and separation via centrifugal contactors
- Recovery of organic carryover into CSSX waste product streams (decontaminated salt solution and strip effluent)

Pilot Testing During Conceptual Design

- Real waste MST adsorption tests funded by DOE and performed at Savannah River National Laboratory (SRNL)
- 1/200 Scale CFF tests funded by DOE and performed at University of South Carolina ("The USC")
- 1/5 Scale CSSX system test with caustic salt solution doped with "cold" Cs and with engineered solvent (funded and performed by Parsons)

1/5 Scale CSSX System Test

Pilot Testing During Preliminary Design

- 5/8 Scale APA Test (with caustic salt solution and MST) at Parsons Fabrication Facility in Pasco, WA
- Single Full Scale Contactor/Coalescer Carryover Test (with salt solution and engineered solvent) at General Atomics Facility in LaJolla, CA
- CFF Full Scale Test (with salt solution and MST) at Parsons Fabrication Facility in Pasco, WA (completed during Final Design)
- CSSX Full Scale Test (with salt solution doped with "cold" Cs and with engineered solvent) at Energy Solutions Facility in Barnwell, SC (completed during Final Design)

3/5 Scale APA Pilot Test

- 12-ft diameter x 14-ft-tall vertical tank (about 1/3 Scale by volume)
- 3 Pressure Receivers
- 3 Vacuum Receivers
- Vacuum Blower

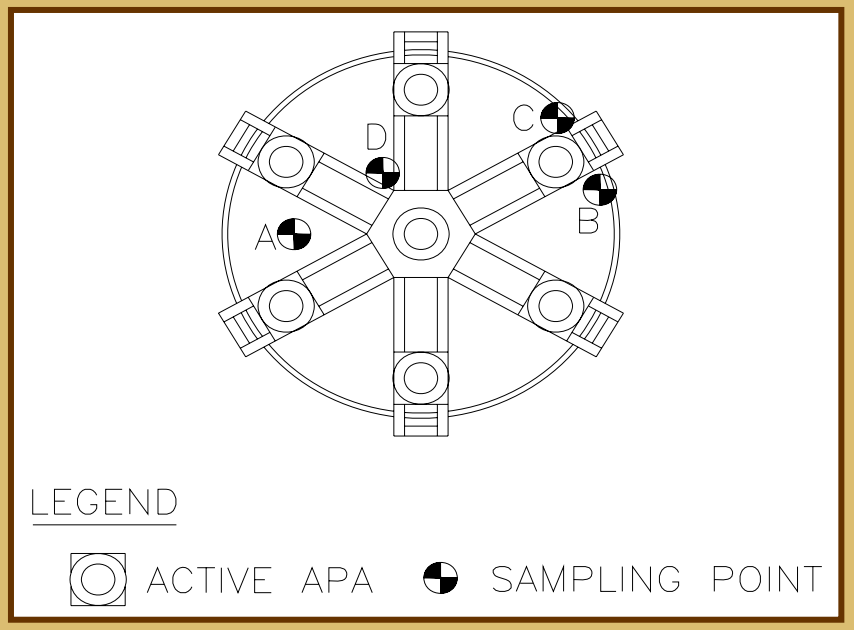

Used both side-firing and downward-firing APAs, which could be positioned in the tank

Tested with 3, 4, 6, and 7 APA configurations

Air Pulse Agitators Inside Feed Tank

Single Contactor Carryover Recovery Test (SCCRT)

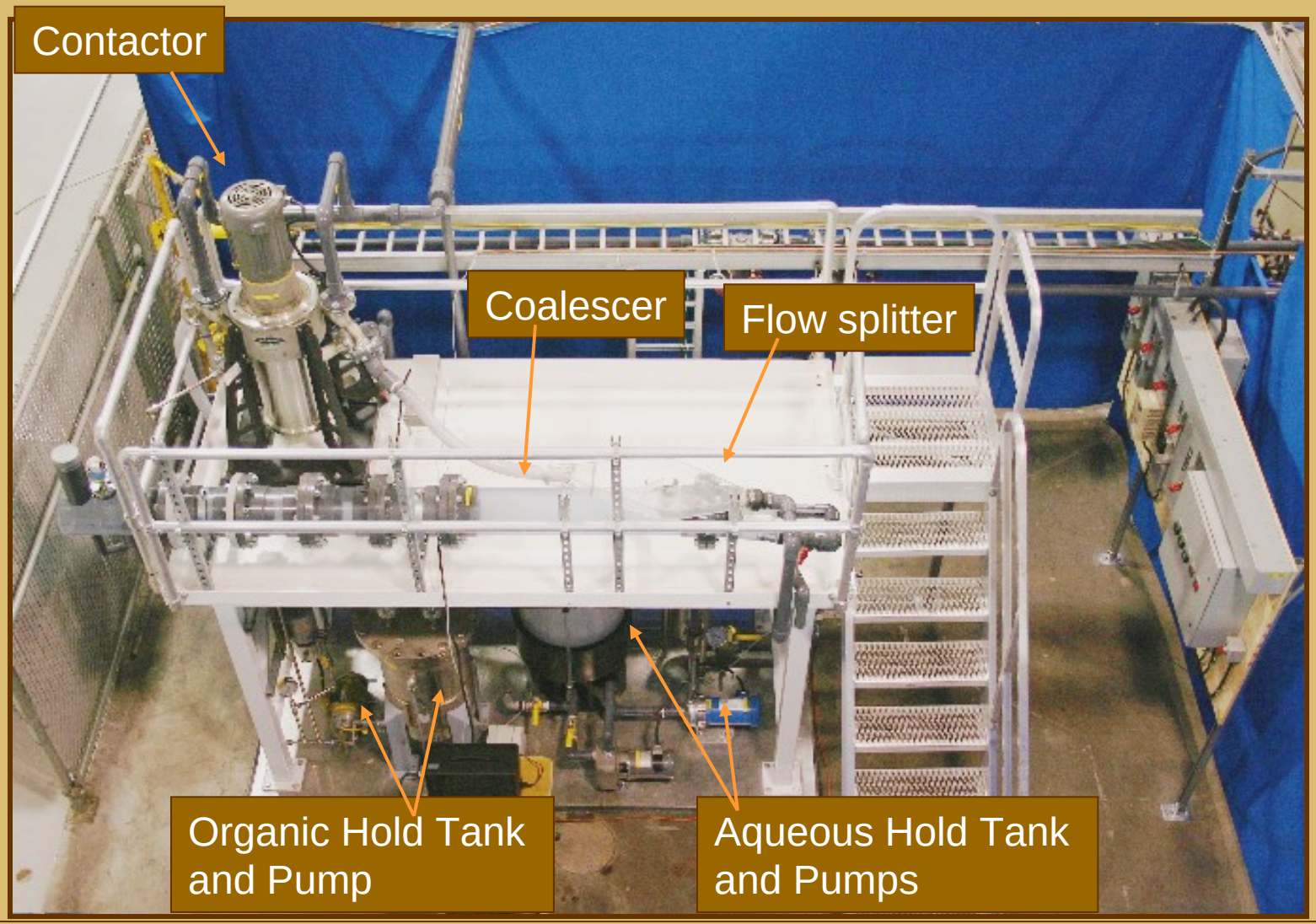

SCCRT Test Equipment (cont)

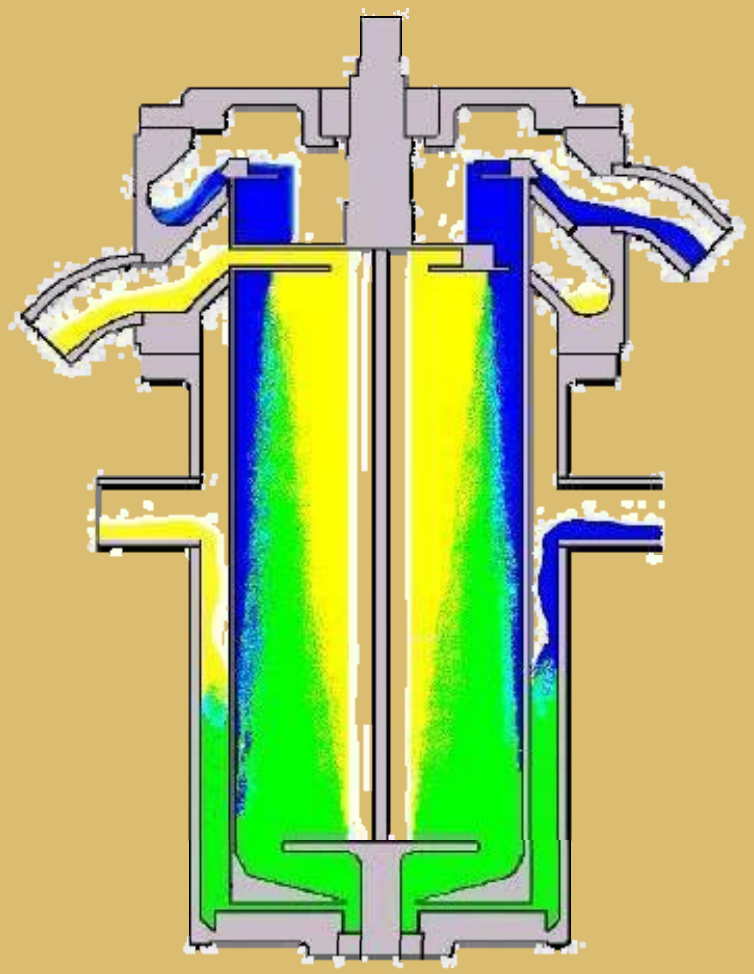

Contactor

CFF Feed Tank with Air Pulse Agitators

CFF Filtration Loop and Feed Tank

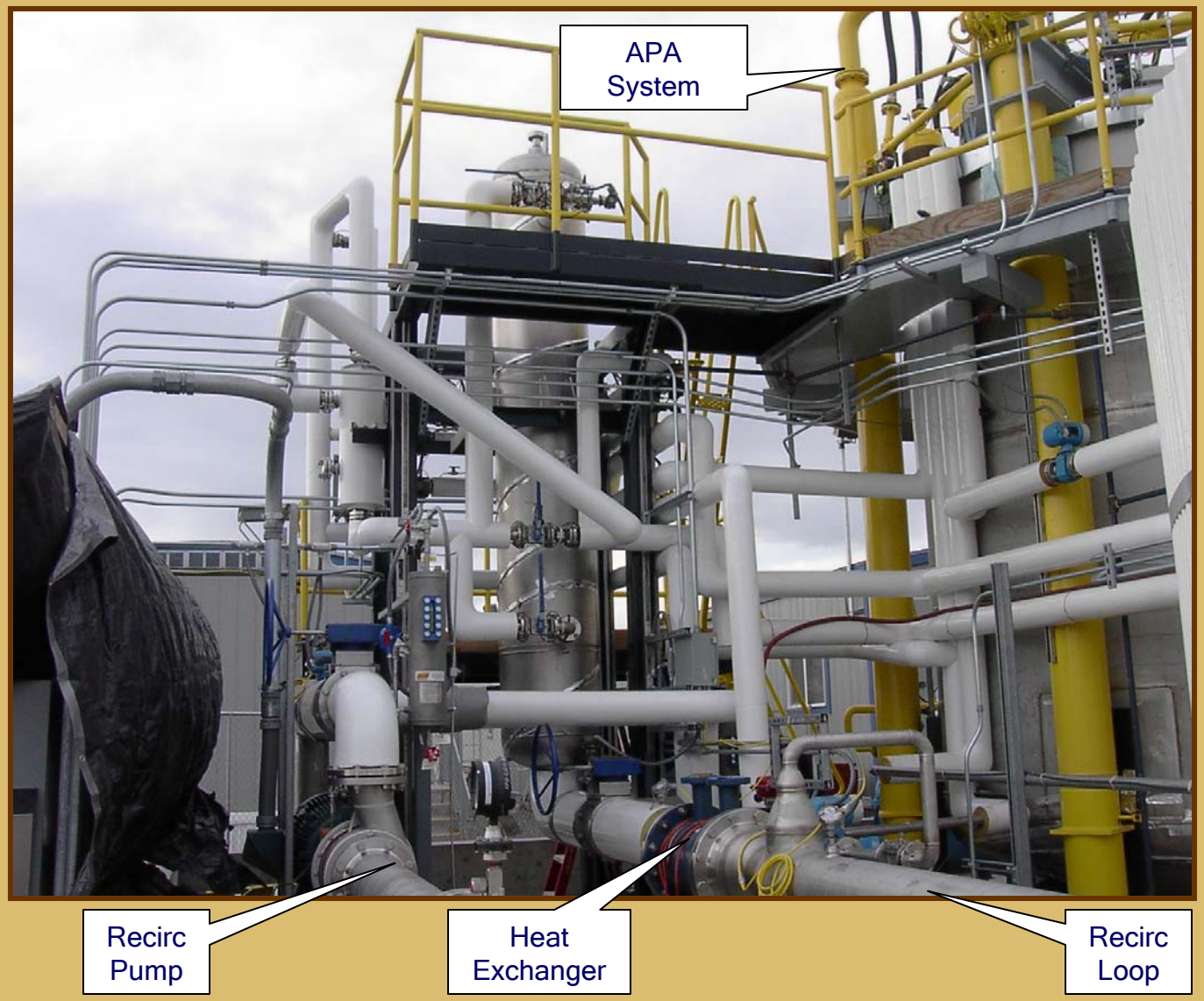

Cross Flow Filter

CFF Tube Bundle

Lower end of Bundle with "Piston Ring" Type Seals

Upper Face of Tube Bundle

Full Scale CSSX Test System Fabrication at Parsons Pasco Fabrication Facility

Full Scale CSSX Test System at Barnwell, SC

Full Scale CSSX Test In Process at Barnwell, SC

Pilot Testing During Final Design

- Completed CFF Full Scale Test
- Completed CSSX Full Scale Test
- 1/5 Scale APA Test at Aiken Technical College (completed)
- Second 5/8 Scale APA Test at Parsons Fabrication Facility (completed)
- Barium Decay Tank Full Scale Test (in progress at Parsons Technology Center in Aiken, SC)

Future Reliability and Maintainability Testing

- Near term Reliability and Maintainability Tests to be performed at Parsons Technology Center in Aiken:
  - Long term CSSX Full Scale Test
  - CFF filter cartridge removal/replacement
  - Analytical Laboratory Hot Cell and Manipulator O&M tests
  - Remote actuated valve maintainability tests
- Long Term Reliability and Maintainability Tests to be performed as part of Comprehensive Factory Acceptance Tests (FATs) for all Engineered Equipment at vendor facilities

Lessons Learned

- Dealing with Expected and Unexpected Results
- Conduct of Testing and Conduct of Operations (COO)
- Pilot Scale Testing in the Context of Commissioning

Dealing with Expected and Unexpected Results

- Systemization identifies some, but not all, equipment design flaws
- Expect frequent test interruptions to redesign/modify test system
- Operational problems encountered are typically not related to core technology
- Typical operational problems
  - Seal leakage
  - Inadequate venting
  - Solids precipitation
  - Flow disturbances/hydraulic imbalances
  - Equipment failures
  - Operator errors (e.g., misrouting, spills, etc.)

Dealing with Expected and Unexpected Results (cont)

- Results can be counterintuitive and contrary to design calculations
- Some results are not explainable. Examples include:
  - Change in color of engineered solvent
  - Flow sensitivities of hydraulic contactors
  - Strip efficiency increases with increasing flow rate
  - Side firing APA nozzles are less effective than vertical firing nozzles
  - Tank mixing insensitive to APA air pressure above ~30#
  - Filter flux increases as filter pore size decreases
  - Filtrate flow generally insensitive to solids concentration in primary side of CFF

Dealing with Expected and Unexpected Results (cont)

- Data Verification and Analysis
  - Calibrate measuring and test equipment (M&TE)
  - Obtain duplicate sample and analyze using multiple methods/laboratories
  - V&V data acquisition software
  - After verifying data acquisition methods, accept the data as real and revise the design models accordingly
  - Develop/apply empirical models for scale up

Dealing with Expected and Unexpected Results (cont)

- Non-prototypic equipment or configuration can negatively effect test operations or invalidate test results
  - Seemingly minor and irrelevant concessions to design fidelity can lead to significant operational problems
  - Problems resulting from non-prototypic test equipment have included:
    - Flow anomalies due to non-prototypic pipe size/ routing/ connections
    - High vibration due to non-prototypic equipment mounting
    - Air entrainment
    - In-service equipment failures (e.g., seal leakage)
- Changes in plant design may require repeating test with modified test system

Small Piping Discontinuities Produce Big Effects

- Flow disturbance caused by sight glasses is indicative of what to avoid in process piping

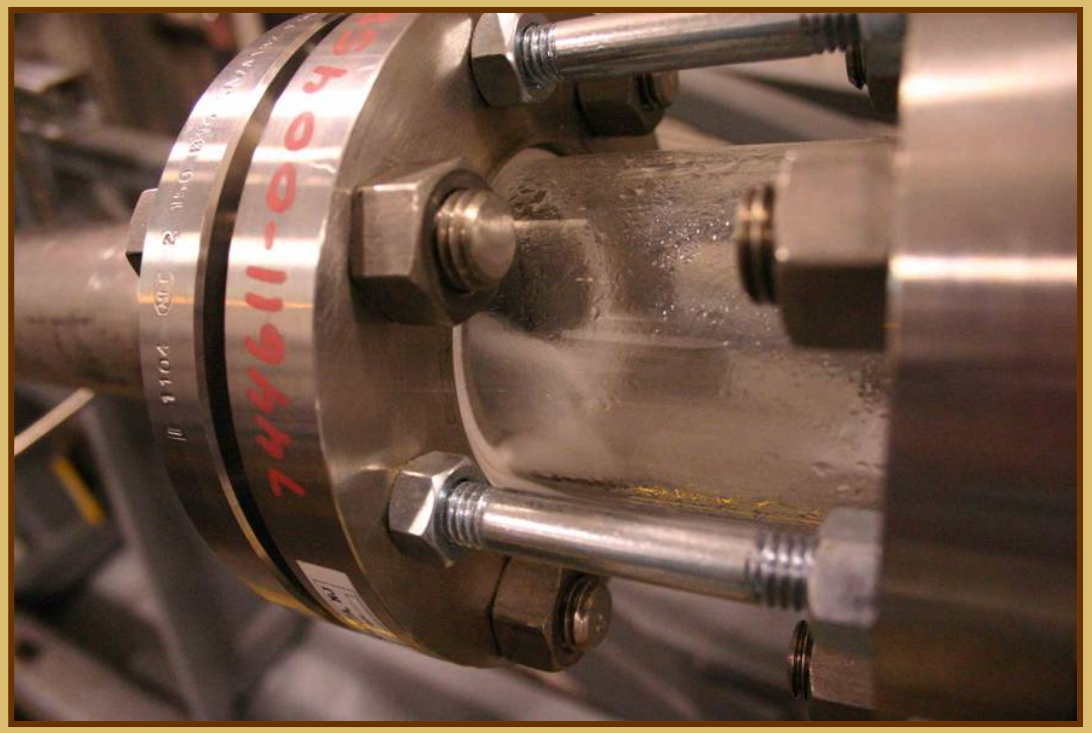

Slightly oversize sight glass i.d. causes a standing wave in effluent (scrub flow from EXT-202B, 1.3 GPM)

CFF Seal Design Changed as Result of Pilot Testing

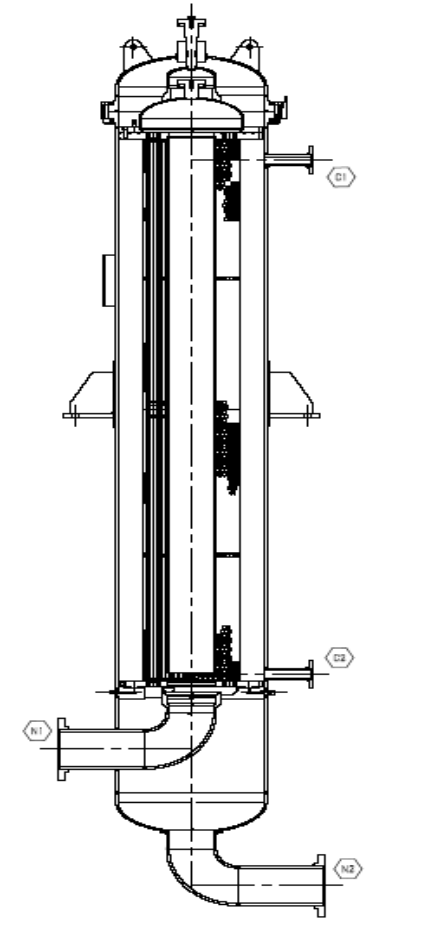

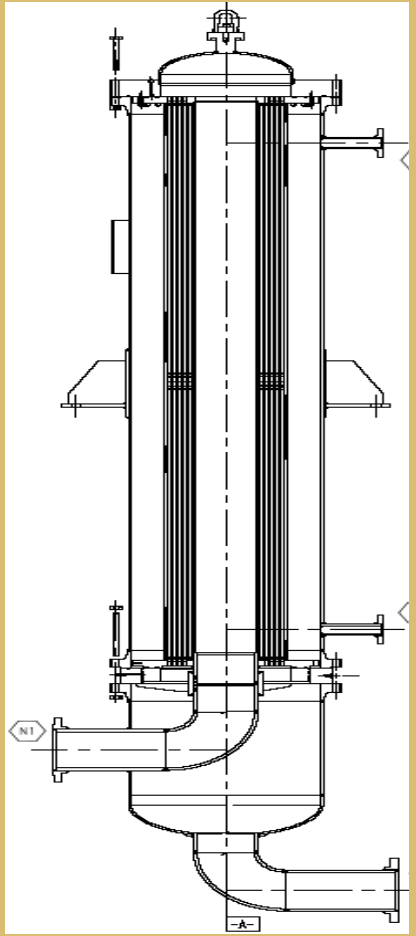

Initial (Left) and Final (Right) Filter Design

Test System Configuration Control is Essential

- Test system design should be subject to same review/approval as plant design
- Implementing design changes is difficult if baseline design is not well documented
- Obtaining/installing replacement parts and effecting repairs is difficult without design drawings <u>and</u> design basis

Conduct of Testing and COO

- Formal Conduct of Testing program should be established prior to testing
  - Necessary for personnel safety, equipment protection, traceability and reliability of test results
  - Early implementation of Conduct of Testing fosters COO culture within Testing/ Commissioning Organization
  - Formal COO program is ultimately required for Construction Acceptance Testing and Commissioning
- Cost/schedule for implementing formal Conduct of Testing program for Pilot Testing must be balanced against risk; graded approach is recommended

Test Log

- Essential for data evaluation and to perform post-mortem evaluation of operational upsets, equipment failures, etc.
- Document all test condition changes, equipment performance anomalies, maintenance performed, etc.
- Record of measurements and samples obtained for each test sequence

Conduct of Testing and COO (cont)

- Conduct of Testing elements recommended for Pilot Testing
  - Configuration Control (in the "field")
  - Lockout/Tagout Program for test equipment maintenance
  - Maintenance Work Control
  - Test personnel training/qualifications
  - Test Plans and test procedures
  - Valve/switching lineups
  - Shift Turnover, Pre-job Briefings
  - Test Log
  - Shift Orders/Standing Orders
  - Operator Aids
  - Waste Management Program (where required)
  - Commissioning Review Board

Configuration Control (in the field)

- Drawing stick at test location with design changes identified
- Temporary Modifications
- Equipment status

Lockout/Tagout Program for Test Equipment

- Specific to test equipment location and organization conducting testing
- Lockout/tagout installer/checker training/ qualification
- Lockout/tagout log and control

Maintenance Work Control

- Job Hazard Analysis
- Work Packages
- Test Director approval for repairs/modifications
- Post-Maintenance Testing

Test Personnel Training/ Qualifications

- Training on Conduct of Testing administrative programs
- Document job duties/responsibilities and personnel qualifications for all positions
- Document training, prior experience of Operators, Test Engineers/Directors, Maintenance Craft

Test Plans/Test Procedures

- Test Plans developed to define test objectives, methods, and acceptance criteria
- Test procedures developed for test operations including system start-up, shutdown, and special evolutions (e.g., chemical make-up, waste neutralization/ disposal)
- Procedure control program required including processes for procedure review/ approval, revisions, and interim changes

Valve/Switching Lineups

- Used to establish initial conditions for start-up and for safe shutdown
- Performed after each major test evolution

Shift Turnover/ Pre-Job Briefings

- Shift turnover process required for 24/7 testing
- Pre-job briefing performed prior to start of shift or major evolutions

Shift Orders/Standing Orders

- Formal means of communication with shift personnel
- Establishes management expectations for work to be completed and for Conduct of Testing
- Identifies changes to procedures, test sequences, etc.
- Promulgation of Required Reading and Lessons Learned

Waste Management Program

- Waste simulants may be subject to hazardous waste regulations
- Special requirements for hazardous waste management generally include:
  - EPA approval as Small or Large Quantity Generator
  - Training of personnel (Generator Certification Official [GCO], HAZWOPER, etc.)
  - Secondary containment
  - Waste Characterization and Packaging procedures/equipment

Waste Management Program (cont)

- Spill response plan
  - Spill kits and Personal Protective Equipment (PPE)
  - Response procedures and personnel training
  - Notification process
- Vapors from chemicals used in testing may be harmful and require
  - IH monitoring
  - Respiratory protection

Commissioning Review Board

- Senior Management review/approval of Test Plans, Test Reports, and Lessons Learned
- Review and direct evaluation of unexpected results or operational upsets
- Review unplanned events (e.g., spills, misrouting, etc.) and direct corrective actions
- Review/approve Root Cause Evaluations and Lessons Learned Reports

Pilot Testing in the Context of Commissioning

- Pilot Testing is part of Commissioning continuum
- Pilot Testing should be performed by Commissioning/Testing organization
  - Conduct of Testing Program for Pilot Testing is directly transferable to Commissioning
  - Pilot Testing personnel are trained and qualified to same standards as Start-up Engineers who will be needed for Commissioning
  - Commissioning begins with Factory Acceptance Testing and Construction Acceptance Testing shortly after completion of Pilot Testing
- Pilot Testing Lessons Learned must be implemented in later stages of project
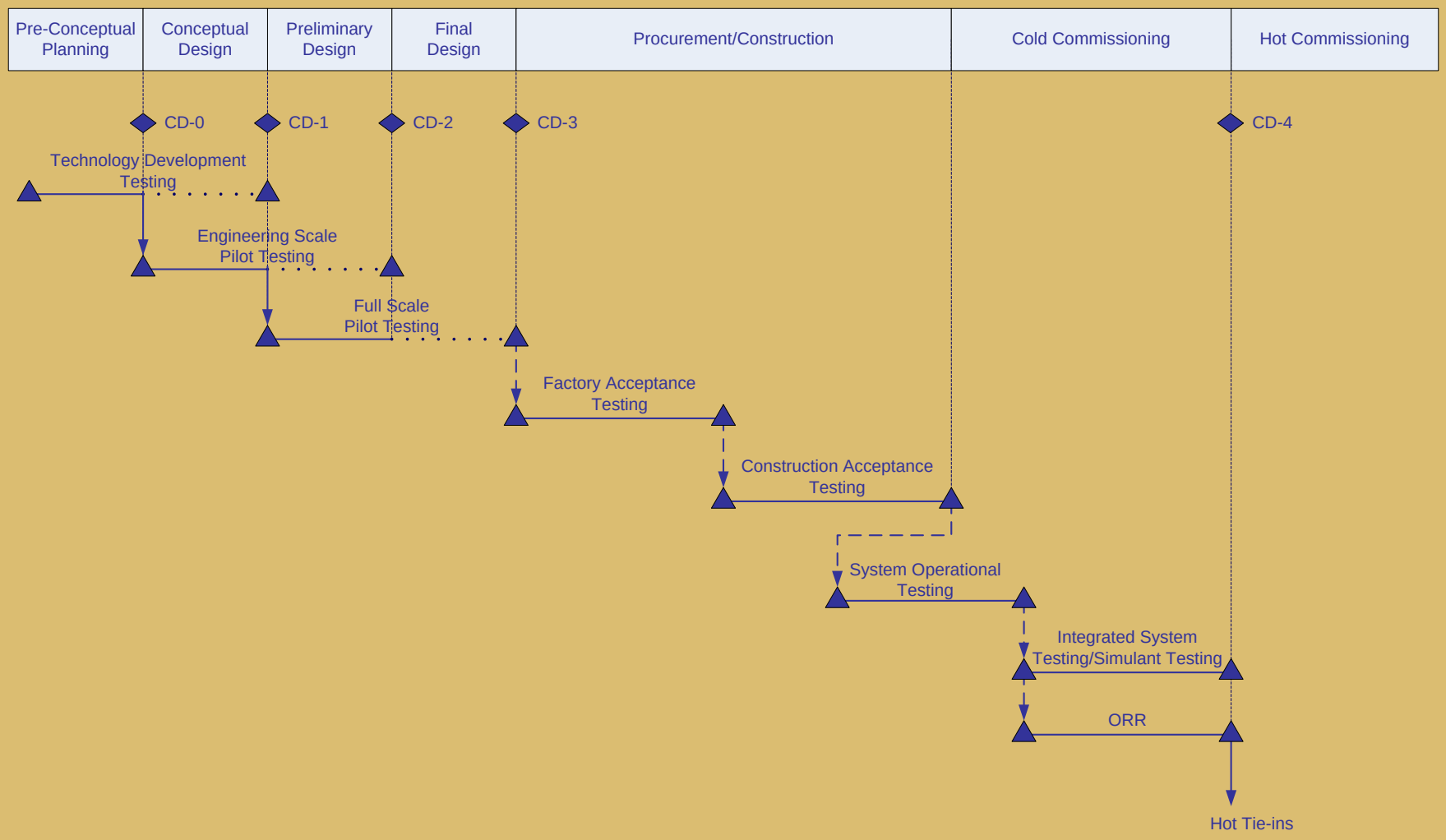
Pilot Testing Vs. Commissioning